ConnectCore MP15

System-on-module

Hardware Reference Manual

Revision history—90002510

Revision	Date	Description
1P	December 2022	Initial draft.
2P	March 2023	Added mapping between SOM pads and ADC channels to IOMUX tables; added note regarding data matrix on SOM label; added comment on pad B13; revised VCC_LICELL description; changed VSYS minimum voltage.
3P	November 2023	Added GPIO caution statement.
4P	January 2024	Removed mentions of MCA; corrected typo in features list; changed pad names and power group for D3 and D4; modified VCC_ LICELL, Y1, V3, P1, E3, and W8 comments; expanded Bootstrap section; added description and additional note for OTG_VBUS; added Power consumption section; added tolerances and radius for host PCBs; added Output power rails caution statement; changed LDO2_ 2V8 and LDO6_1V8 output power rails to LDO2 and LDO6.
A	February 2024	Added certifications.
B	April 2024	Added assembly instructions; fixed typo in SOM block diagram.

Trademarks and copyright

Digi, Digi International, and the Digi logo are trademarks or registered trademarks in the United States and other countries worldwide. All other trademarks mentioned in this document are the property of their respective owners.

© 2022-2024 Digi International Inc. All rights reserved.

Disclaimers

Information in this document is subject to change without notice and does not represent a commitment on the part of Digi International. Digi provides this document “as is,” without warranty of any kind, expressed or implied, including, but not limited to, the implied warranties of fitness or merchantability for a particular purpose. Digi may make improvements and/or changes in this manual or in the product(s) and/or the program(s) described in this manual at any time.

Warranty

To view product warranty information, go to the following website:

www.digi.com/howtobuy/terms

Customer support

Gather support information: Before contacting Digi technical support for help, gather the following information:

- Product name and model
- Product serial number (s)
- Firmware version
- Operating system/browser (if applicable)
- Logs (from time of reported issue)
- Trace (if possible)
- Description of issue
- Steps to reproduce

Contact Digi technical support: Digi offers multiple technical support plans and service packages. Contact us at +1 952.912.3444 or visit us at www.digi.com/support.

Feedback

To provide feedback on this document, email your comments to

techcomm@digi.com

Include the document title and part number (ConnectCore MP15 System-on-Module, 90002510 B) in the subject line of your email.

Contents

About the ConnectCore MP15

Features and functionality 6
Safety instructions 7
Limitations and notices 8
  GPIO 8
  Latch-up 8
Block diagrams 9
  ConnectCore MP15 module 10
  STMicroelectronics STM32MP157 application processor 11
Power interfaces 12
  System-on-module power architecture 12
  Reference power diagram 13
  Electrical characteristics 14
Bootstrap 16
Wireless interfaces 16
  WLAN IEEE 802.11a/b/g/n/ac 17
  RF channels 19
  Transmit power 21
  Antenna ports 22
  Bluetooth 22

Module pinout

External signals and pin multiplexing 23
  Digi ConnectCore Smart IOmux tool 24
  Castellated pad signals and multiplexing 25
  LGA pad signals and multiplexing 40

Module specifications

Power consumption 85
  Power consumption use cases 86
Mechanical specifications 86
  Host PCB footprint and cutout 86
  Label 88
  Weight 88
Environmental specifications 88
Socket options 89

Assembly instructions

Moisture sensitivity and shelf life 91
Mounting 91
Coplanarity 91
Solder paste print 91
Stencil 91
SMT pick and place 92
SMT process parameter reference - castellation and LGA applications 92
Reflow oven profile 92
Conformal coating 94

Regulatory information and certifications

United States FCC 96
- Labeling requirements 96
- Maximum power and frequency specifications (FCC) 96
- FCC notices 97
- FCC-approved antennas 97
- RF exposure 100
- Operating frequency 100

Europe and UK 101
- CE mark 101
- CE and UKCA OEM labeling requirements 101
- Declarations of Conformity 102
- Approved antennas 103

Canada (IC) 104
- Canadian Notice 104
- Labeling requirements 104
- Transmitters with detachable antennas 104
- RF exposure 105
- Approved antennas 105

Japan 105
- Approval Label (MIC Marking) 106

About the ConnectCore MP15

The Digi ConnectCore® MP15 System-on-Module (SOM) platform is a highly integrated, cost-effective, connected, secure embedded solution, built on the STM32MP15x MPU family. It integrates memory, power management, pre-certified wireless connectivity and advanced Digi TrustFence device security with a complete, open-source Linux software platform based on the Yocto Project.

Features and functionality

- The ConnectCore MP15 system-on-module is based on the STM32MP processor from STMicroelectronics. This processor offers a number of interfaces, most of them multiplexed and not available simultaneously. The module has the following features:
- STM32MP157C dual ARM Cortex-A7 and single Cortex-M4 cores:
  - Cortex-A7 operating at up to 650 MHz.
  - 32 KB L1 instruction cache.
  - 32 KB L1 data cache.
  - 256 KB level 2 cache.
  - 3D GPU (Vivante - OpenGL ES 2.0) running at up to 533 MHz with performances up to 26 Mtriangle/s, 133 Mpixel/s.
  - Cortex-M4 operating at up to 209 MHz.
- Up to 512 MB,16-bit DDR3 memory.
- Up to 512 MB, 8-bit SLC NAND flash memory.
- STPMIC1A Power Management IC (PMIC):
  - x4 adjustable buck SMPS converter.
  - x1 boost SMPS.
  - x1 USB OTG compliant power switch.
  - x1 general purpose power switch.
  - x4 adjustable general purpose LDOs.
  - x1 DDR reference voltage LDO.
  - x1 DDR3 termination/DDR bypass mode/general purpose LDO.
  - x1 USB PHY LDO.
- IEEE 802.11 a/b/g/n/ac WLAN interface.
- Bluetooth version 5.0.
- Debug interfaces:
  - System JTAG controller for STM32MP157C.
- STM32MP157C interfaces:
  - x6 I2C.
  - x4 UART.

- x4 USART.
- x6 SPI, three I2Ss full-duplex master/slave.
- x4 SAI.
- x1 SPDIF Rx.
- Management data inpout/output slave (MDIOS).
- x3 SDMMC.
- USB high-speed Host with two ports, two high-speed PHYs and a USB OTG high-speed with full-speed PHY or high-speed PHY shared with second port of USB Host.
- x2 FDCAN, one of them supporting TTCAN mode.
- x1 Gigabit Ethernet.
- HDMI-CED.
- x1 Flexible memory control (FMC) interface.
- x1 Quad-SPI Flash memory interface.
- x2 ADCs with 16-bit max resolution.
- x2 12-bit D/A converters.
- x1 digital filters for sigma delta modulator (DFSDM) with 8 channels/6 filters.
- x1 camera interface for CMOS sensors.
- x1 LCD-TFT display controller.
- x1 MIPI DSI.

Safety instructions

- The ConnectCore MP15 module cannot be guaranteed operation due to the radio link and so should not be used for interlocks in safety critical devices such as machines or automotive applications.
- The ConnectCore MP15 module has not been approved for use in (this list is not exhaustive):
  - nuclear applications
  - explosive or flammable atmospheres
- There are no user serviceable components inside the ConnectCore MP15 module. Do not modify the ConnectCore MP15 in any way. Modifications may exclude the module from any warranty and can cause the ConnectCore MP15 to operate outside of regulatory compliance for a given country, leading to the possible illegal operation of the radio.
- Use industry standard ESD protection when handling the ConnectCore MP15 module.
- Take care while handling to avoid electrical damage to the PCB and components.
- Do not expose ConnectCore MP15 module to water or moisture.
- Use this product with the antennas specified in the ConnectCore MP15 module user guides.
- The end user must be told how to remove power from the ConnectCore MP15 module or to locate the antennas 20 cm from humans or animals.

Limitations and notices

GPIO

The ConnectCore MP15 SoC has a limitation in the number of GPIOs that can be used as interrupt lines. The Extended Interrupt and Event Controller (EXTI) can only handle up to 16 GPIO lines working as interrupt (EXTI0..EXTI15). The multiplexers work as shown in the following figure:

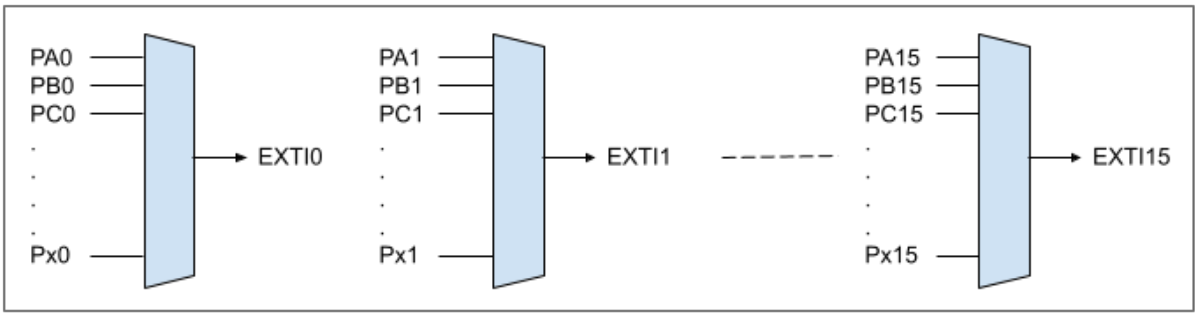

This means that if pin 1 of a given port (for instance, PB1) has been selected to work as interrupt, pin 1 of any other GPIO port cannot simultaneously work as interrupt.

When designing your hardware, avoid using the same GPIO numbers as interrupt lines of two or more peripherals.

CAUTION! On the ConnectCore MP15, GPIO PA0 is already configured as an interrupt, so other GPIOs with index 0 are not externally available for interrupt purposes.

Latch-up

Latch-up is a condition that can cause excessive current draw and result in excessive heating of the microprocessor or its power supplies. This excessive heating can permanently damage the microprocessor and/or its supporting components.

The microprocessor used on this module, like all CMOS devices, can be driven into a latch-up condition if any I/O pin is driven outside of its associated power rail. Care must be taken to:

- Never drive an I/O pin beyond its positive rail or below ground.
- Never drive an I/O pin from an external power source during the power-on or reset sequences.
- Never hot-swap the module or interrupt its ground connection to external circuitry.

When you use an external supply on the carrier board supporting the ConnectCore MP15 module, make sure this supply is NOT back driving STM32MP1 I/Os while their power rails are not enabled. For example, this can happen when an external 3.3V supply is available on the carrier board and this supply powers components driven by STM32MP1 I/Os. In this case, Digi

recommends you enable the external power supply after internal 3.3V is enabled, or add the necessary protection circuitry to avoid back voltage (leakage).

Block diagrams

The figures below show block diagrams of the ConnectCore MP15 module and of the STMicroelectronics STM32MP157 application processor.

ConnectCore MP15 module

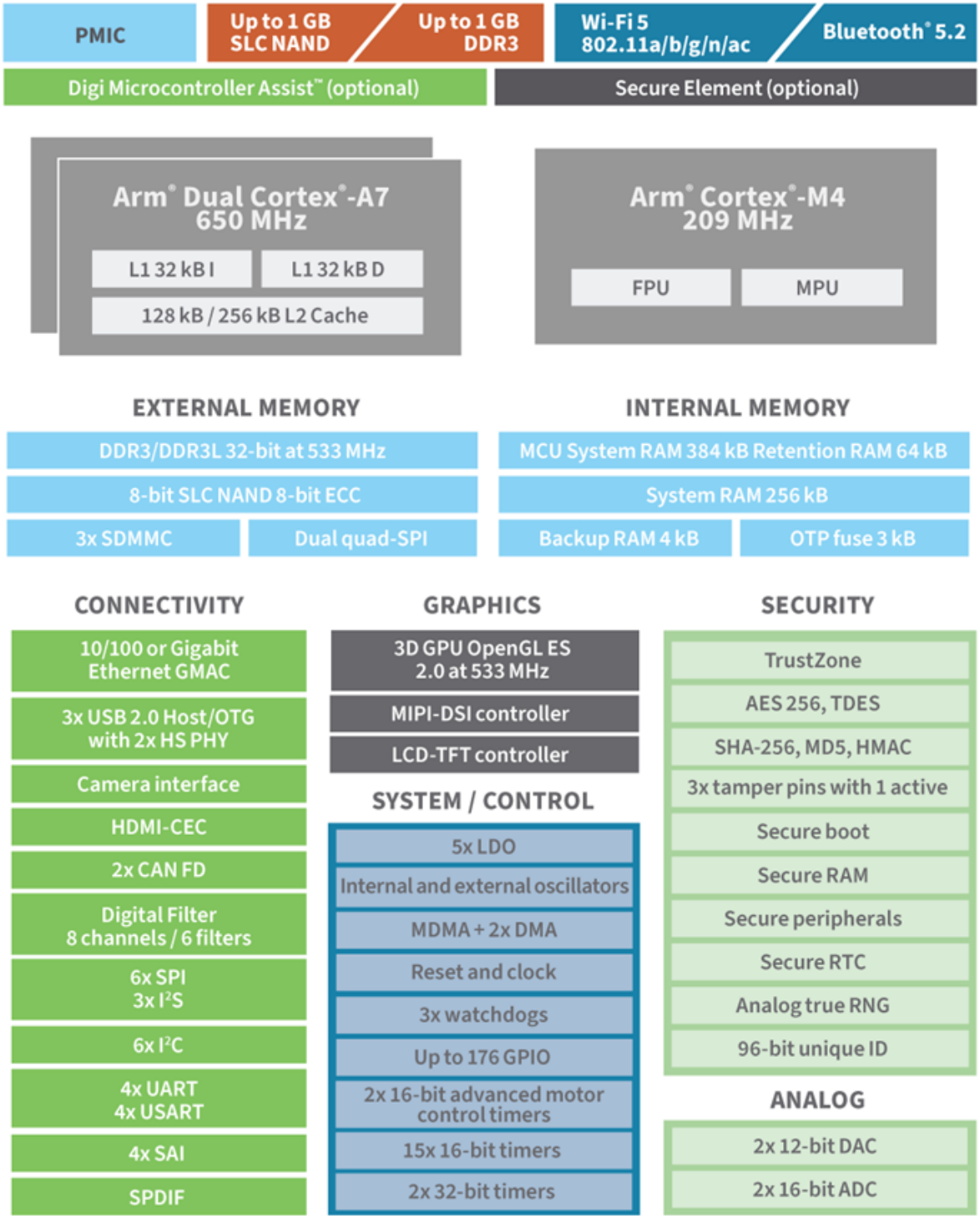

STMicroelectronics STM32MP157 application processor

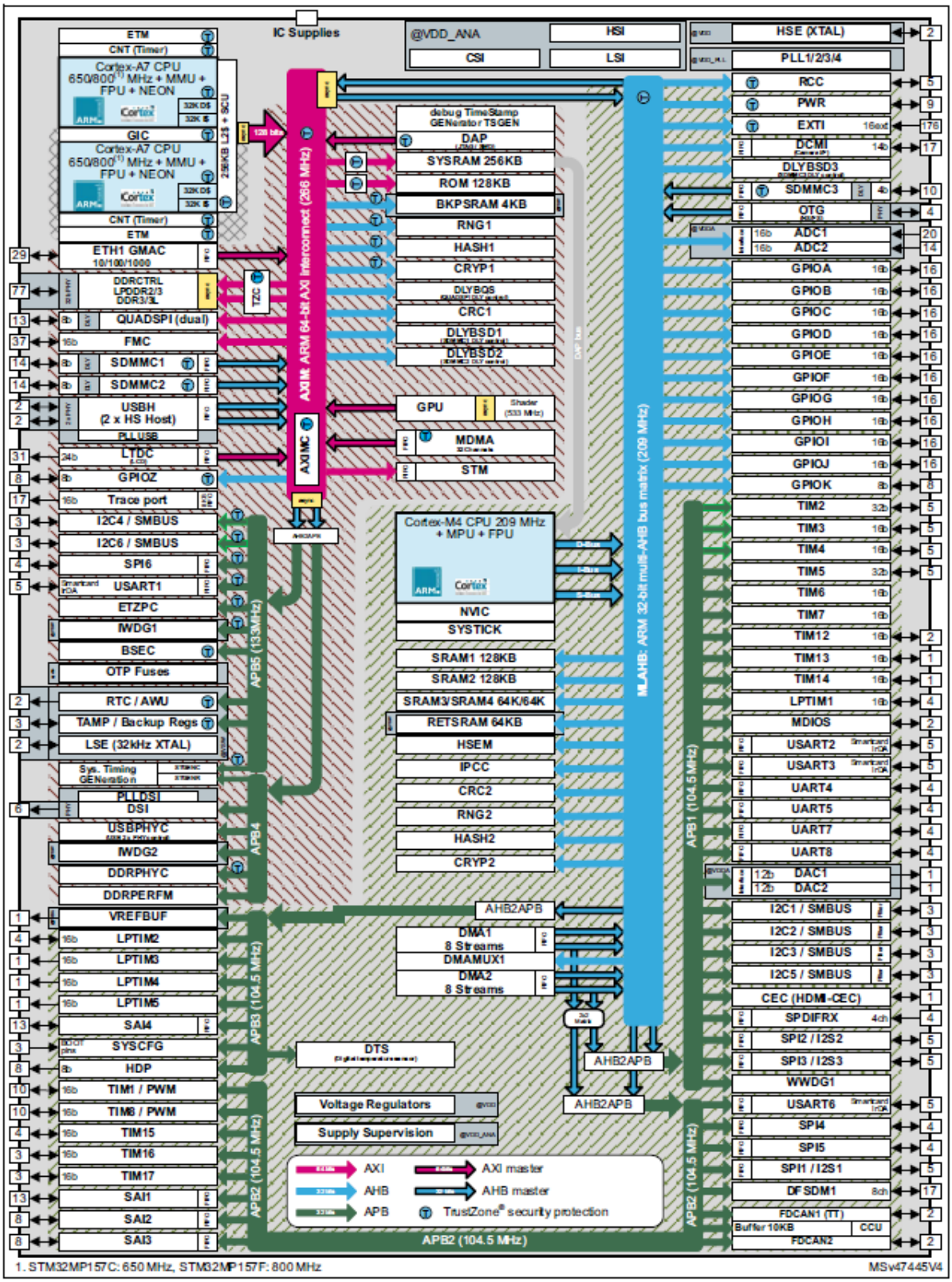

Power interfaces

System-on-module power architecture

The ConnectCore MP15 requires two primary power supply inputs: VSYS and VSYS2, which are the input power supplies to the on-module ST STPMIC1 power management IC (PMIC) that generates all required supply voltages for the module as well as the external interfaces.

The following table summarizes the PMIC regulators and switches on the ConnectCore MP15 SOM:

PMIC regulator	SOM power rail name	Input power supply	Internally used	Externally available
BUCK1	-	VSYS2	YES	NO
BUCK2	-	VSYS2	YES	NO
BUCK3	VDD	VSYS	YES	YES
BUCK4	3V3	VSYS	YES	YES
LDO1	-	3V3	YES	NO
LDO2	2V8	3V3	NO	YES
LDO3	-	-	YES	NO
LDO4	-	VSYS	YES	NO
LDO5	VDD_SD	3V3	NO	YES
LDO6	1V8	3V3	NO	YES
PWR_USB_SW	VBUS_OTG	-	NO	YES
PWR_SW	VBUS_SW	-	NO	YES
DDR_REF	-	VSYS2	YES	NO
BOOST	-	VSYS	YES	NO

In addition to the input power supplies of the PMIC, other power domains of the SOM must also be set externally. This allows power management flexibility so you can adapt the input voltage of the different interfaces. The following table lists the input power rails that must be powered externally to the SOM together with the devices/power domains they power:

Input rail	Internally connected to	Description
VCC_LICELL	STM32MP1 CPU, VBAT	Support for RTC, backup registers, RAM retention and backup SRAM on the CPU.
OTG_VBUS	STM32MP1 CPU, OTG_ VBUS	**CAUTION!** Avoid supplying VBUS_ OTG before the SOM is powered. Doing so could cause permanent damage to the device. Refer to Application note AN4879 from STMicroelectronics for further information.

Reference power diagram

The following diagram represents the power architecture of the ConnectCore MP15 module in a typical application:

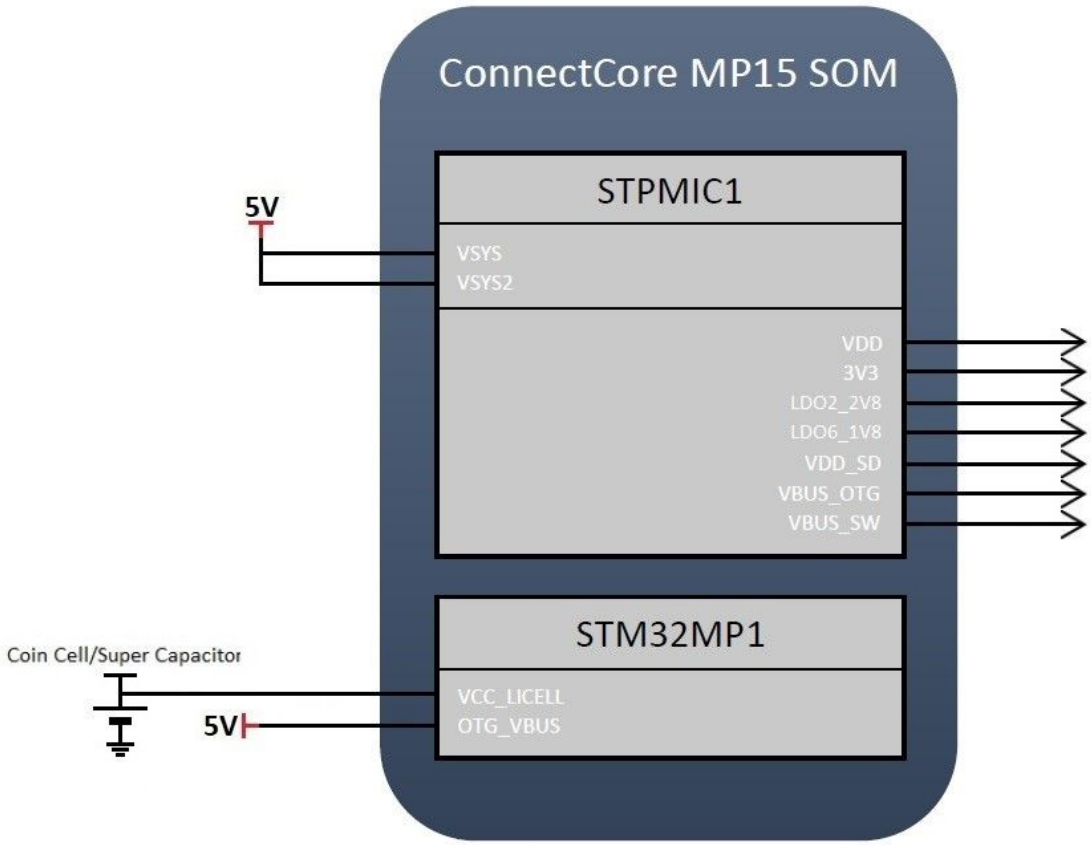

Electrical characteristics

Input power rails

The following table lists the electrical specifications of all input power rails for the ConnectCore MP15:

Device	SOM power rail	Input voltage (V)		
		Minimum	Typical	Maximum
PMIC	VSYS	3.7	-	5.5
	VSYS2	2.8	-	5.5
CPU	VCC_LICELL	1.2	-	3.6
	OTG_VBUS	Vss-0.3[1]	-	6.0[1]

[1] Absolute maximum ratings. OTG_VBUS must not be present if there is no power at the module.

Output power rails

The following table lists the electrical specifications of all output power rails for the ConnectCore MP15:

SOM power rail	Used internally in the SOM	Output voltage			Accuracy (%)		Continuous output current (mA)[1]	Turn-on time (us)		Turn-off time (ms)
		Min	Typ	Max	Min	Max		Typ	Max	Max
3V3	YES	-	3.3	-	-4	4	2000	235	400	1.5
VDD	YES	-	3.3	-	-4	4	500	235	400	1.5
VDD_SD	NO	1.7	-	3.9	-2	2	350	160	-	3
LDO2	NO	1.7	-	3.3	-2	2	350	160	-	3
LDO6	NO	0.9	-	3.3	-2	2	150	100	-	3
VBUS_OTG	NO	-	-	-	-	-	500	3000	-	3
VBUS_SW	NO	-	-	-	-	-	1000	3000	-	3

Note Some of the electrical characteristics may depend on the configuration and operation mode of the different regulators. For a complete description of the electrical characteristics of the different output power rails (PMIC regulators), see the STPMIC1 datasheet.

[1] The maximum output current involves both external and internal circuitry. For those regulators that are used internally in the SOM, the current available outside will be lower.

CAUTION! Do not use VDD to power external circuitry. This regulator has low output current capabilities and adding external load could cause malfunction of the system.

Bootstrap

The ConnectCore MP15 module can be configured to boot from different devices and interfaces as determined by the boot ROM. The configuration of the booting process of the CPU is done through the BOOT pin and OTP bytes.

BOOT2	BOOT1	BOOT0	Boot mode
0	0	0	UART and USB
0	0	1	Serial NOR Flash
0	1	0	eMMC (default SDMMC2)
0	1	1	NAND Flash
1	0	0	Reserved
1	0	1	SD card (default SDMMC1)
1	1	0	UART and USB
1	1	1	Serial NAND Flash

Note If the configured boot device is not valid, the system falls back to USB downloader. This is particularly useful in castellated designs, where BOOT0 is not available.

CAUTION! Digi highly recommends you include a recover mechanism on every design using the ConnectCore MP15 module.

Note To boot from a UART port, it is mandatory to access one of the UARTs defined by ST for this purpose on the specific pads:

Signal	GPIO pins						
	USART2	USART3	UART4	UART5	USART6	UART7	UART8
Rx	PA3	PB12	PB2	PB5	PC7	PF6	PE0
Tx	PA2	PB10	PG11	PB13	PC6	PF7	PE1

For further information, refer to STMicroelectronics documentation, specifically https://wiki.st.com/stm32mpu/wiki/STM32_MPU_ROM_code_overview#UART_Boot.

Wireless interfaces

The ConnectCore MP15 System-on-module combines a wireless local area network (WLAN) and Bluetooth dual solution to support IEEE802.11 a/b/g/n/ac WLAN standards and Bluetooth 5, enabling seamless integration of WLAN/Bluetooth and Low Energy technology. Digi also offers a non-wireless variant of the ConnectCore MP15 module.

The following sections include specifications for the wireless interfaces available on the ConnectCore MP15 module.

WLAN IEEE 802.11a/b/g/n/ac

The following sections specify the performance of the WLAN IEEE 802.11a/b/g/n/ac interface on the ConnectCore MP15 module.

Modulation and data rates

The following tables list modulation values for the ConnectCore MP15 module, which supports the following WLAN standards:

Mode	Modulation & coding	Rate
802.11b	DBPSK	1 Mbps
	DQPSK	2 Mbps
	CCK	5.5 Mbps
	CCK	11 Mbps
802.11ga	BPSK-1/2	6 Mbps
	BPSK-3/4	9 Mbps
	QPSK-1/2	12 Mbps
	QPSK-3/4	18 Mbps
	16QAM-1/2	24 Mbps
	16QAM-3/4	36 Mbps
	64QAM-2/3	48 Mbps
	64QAM-3/4	54 Mbps
802.11n	BPSK-1/2	MCS0
	QPSK-1/2	MCS1
	QPSK-3/4	MCS2
	16QAM-1/2	MCS3
	16QAM-3/4	MCS4
	64QAM-2/3	MCS5
	64QAM-3/4	MCS6
	64QAM-5/6	MCS7

Mode	Modulation & coding	Rate
802.11ac	BPSK-1/2	MCS0
	QPSK-1/2	MCS1
	QPSK-3/4	MCS2
	16QAM-1/2	MCS3
	16QAM-3/4	MCS4
	64QAM-2/3	MCS5
	64QAM-3/4	MCS6
	64QAM-5/6	MCS7
	256QAM-3/4	MCS8
	256QAM-5/6	MCS9

Data rate (Mbps) - Non Short Guard Interval (Non-SGI)

Data rate (Mbps)		802.11b		802.11ga		802.11n		802.11ac		
Modulation		DBPSK 1 Mbps	CCK 11 Mbps	BPSK-1/2 6 Mbps	64QAM-3/4 54 Mbps	BPSK-1/2 MCS0	64QAM-5/6 MCS7	BPSK-1/2 MCS0	64QAM-5/6 MCS7	256QAM-5/6 MCS9
2.4 GHz	HT20	1	11	6	54	6.5	65	6.5	65	
	HT40					13.5	135	13.5	135	180
5 GHz	HT20			6	54	6.5	65	6.5	65	
	HT40					13.5	135	13.5	135	180
	HT80							29.3	292.5	390

Data rate (Mbps) - Short Guard Interval (SGI)

Mode		802.11b		802.11ga		802.11n		802.11ac		
Modulation		DBPSK 1 Mbps	CCK 11 Mbps	BPSK-1/2 6 Mbps	64QAM-3/4 54 Mbps	BPSK-1/2 MCS0	64QAM-5/6 MCS7	BPSK-1/2 MCS0	64QAM-5/6 MCS7	256QAM-5/6 MCS9
2.4 GHz	HT20	1	11	6	54	7.2	72.2	7.2	72.2	
	HT40					15	150	15	150	200

Mode		802.11b		802.11ga		802.11n		802.11ac		
Modulation		DBPSK 1 Mbps	CCK 11 Mbps	BPSK-1/2 6 Mbps	64QAM-3/4 54 Mbps	BPSK-1/2 MCS0	64QAM-5/6 MCS7	BPSK-1/2 MCS0	64QAM-5/6 MCS7	256QAM-5/6 MCS9
5 GHz	HT20			6	54	7.2	72.2	7.2	72.2	
	HT40					15	150	15	150	200
	HT80							32.5	325	433.3

RF channels

The ConnectCore MP15 module supports the following frequency bands:

RF band	Ch. BW	Ch. spacing	Channel number (Center freq. MHz)
2.4 GHz	20 MHz	5 MHz	1(2412), 2(2417), 3(2422), 4(2427), 5(2432), 6(2437), 7(2442), 8 (2447), 9(2452), 10(2457), 11(2462), 12(2467), 13(2472), 14(2484)
	40 MHz	5 MHz	3(2422), 11(2462)
5 GHz	20 MHz	20 MHz	36(5180), 40(5200), 44(5220), 48(5240), 52(5260), 56(5280), 60 (5300), 64(5320), 100(5500), 104(5520), 108(5540), 112(5560), 116(5580), 120(5600), 124(5620), 128(5640), 132(5660), 136 (5680), 140(5700), 144(5720), 149(5745), 153(5765), 157(5785), 161(5805), 165(5825)
	40 MHz	40 MHz	38(5190), 46(5230), 54(5270), 62(5310), 102(5510), 110(5550), 118(5590), 126(5630), 134(5670), 142(5710), 151(5755), 159 (5795)
	80 MHz	80 MHz	42(5210), 58(5290), 106(5530), 122(5610), 138(5690), 155(5775)

Note Dependent upon regulatory bodies.

2.4 GHz

2.4 GHz band channel #	Center frequency (MHz)	EUROPE (ETSI)	NORTH AMERICA (FCC)	JAPAN
1	2412	✓	✓	✓
2	2417	✓	✓	✓

2.4 GHz band channel #	Center frequency (MHz)	EUROPE (ETSI)	NORTH AMERICA (FCC)	JAPAN
3	2422	✓	✓	✓
4	2427	✓	✓	✓
5	2432	✓	✓	✓
6	2437	✓	✓	✓
7	2442	✓	✓	✓
8	2447	✓	✓	✓
9	2452	✓	✓	✓
10	2457	✓	✓	✓
11	2462	✓	✓	✓
12	2467	✓	No	✓
13	2472	✓	No	✓
14	2484	No	No	802.11b only

5 GHz

5 GHz band channel #	Center frequency (MHz)	EUROPE (ETSI)	NORTH AMERICA (FCC)	JAPAN
36	5180	Indoors	✓	✓
40	5200	Indoors	✓	✓
44	5220	Indoors	✓	✓
48	5240	Indoors	✓	✓
52	5260	Indoors / DFS / TPC	DFS	DFS / TPC
56	5280	Indoors / DFS / TPC	DFS	DFS / TPC
60	5300	Indoors / DFS / TPC	DFS	DFS / TPC
64	5320	Indoors / DFS / TPC	DFS	DFS / TPC
100	5500	DFS / TPC	DFS	DFS / TPC

5 GHz band channel #	Center frequency (MHz)	EUROPE (ETSI)	NORTH AMERICA (FCC)	JAPAN
104	5520	DFS / TPC	DFS	DFS / TPC
108	5540	DFS / TPC	DFS	DFS / TPC
112	5560	DFS / TPC	DFS	DFS / TPC
116	5580	DFS / TPC	DFS	DFS / TPC
120	5600	DFS / TPC	DFS	DFS / TPC
124	5620	DFS / TPC	DFS	DFS / TPC
128	5640	DFS / TPC	DFS	DFS / TPC
132	5660	DFS / TPC	DFS	DFS / TPC
136	5680	DFS / TPC	DFS	DFS / TPC
140	5700	DFS / TPC	DFS	DFS / TPC
149	5745	SRD	✓	No Access
153	5765	SRD	✓	No Access
157	5785	SRD	✓	No Access
161	5805	SRD	✓	No Access
165	5825	SRD	✓	No Access

Note
DFS = Dynamic Frequency Selection
TPC = Transmit Power Control
SRD = Short Range Devices 25 mW max power

Transmit power

The following table lists nominal transmit power values for the ConnectCore MP15 module based on Murata LBEE5PK2AE-564 specification.

RF band	Standard	Output power (dBm)
2.4 GHz	802.11b	17 (1Mbps) - 17 (11Mbps)
	802.11g	16 (6Mbps) - 16 (54Mbps)
	802.11n	16 (MCS0) - 14 (MCS7)
5 GHz	802.11a	13 (6Mbps) - 14 (54Mbps)
	802.11n (HT20)	16 (MCS0) - 14 (MCS7)
	802.11ac (VHT20)	16 (MCS0) - 13 (MCS8)
	802.11n (HT40)	14 (MCS0) - 13 (MCS7)
	802.11ac (VHT40)	14 (MCS0) - 11 (MCS9)
	802.11ac (VHT80)	13 (MCS0) - 12 (MCS9)

Antenna ports

The ConnectCore MP15 module has one antenna port on the module via a dedicated U.FL connector. The antenna port supports WLAN and Bluetooth functionality.

Bluetooth

The ConnectCore MP15 module supports both Bluetooth and Bluetooth Low Energy protocols:

- Bluetooth 5 with all Bluetooth 4.2 optional features. Bluetooth class 1 and class 2 transmitter operation.
- Integrated WLAN-Bluetooth coexistence.

Module pinout

The ConnectCore MP15 module has a mixed pad structure. The module provides 245 LGA pins, 76 of them connected to the peripheral castellated pads. The general layout can be found on the following diagram:

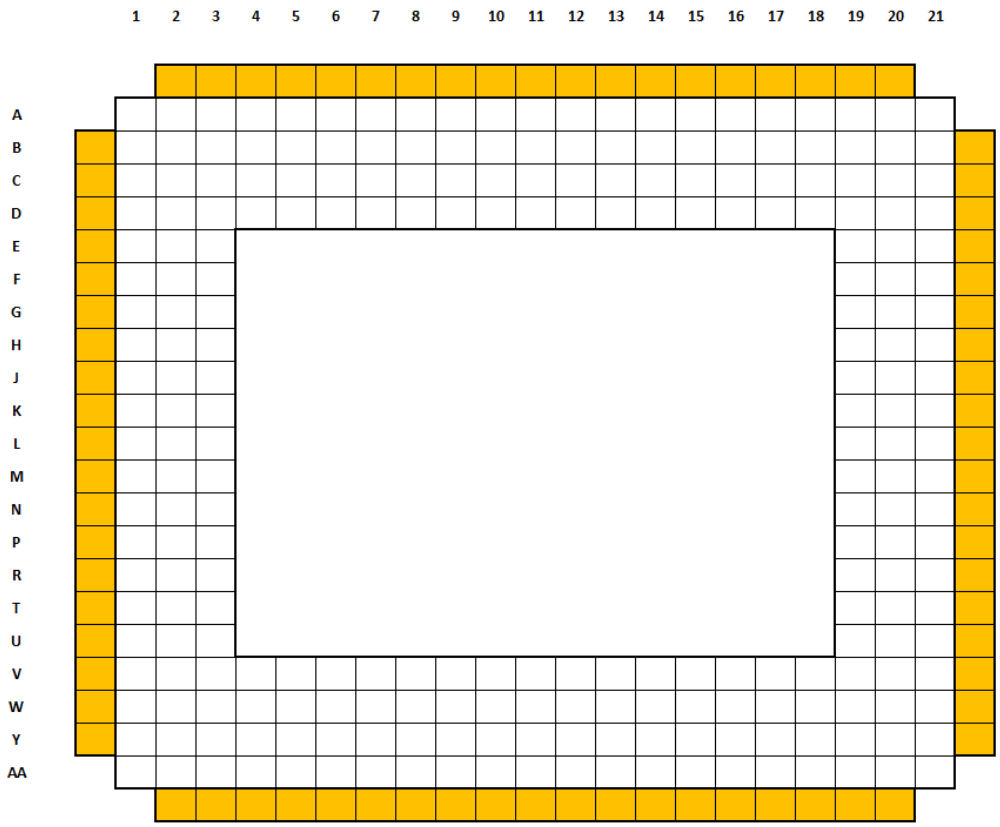

White cells: LGA pads

Orange cells: castellated pads

Note Pad A1 is unconnected. This pad is meant for module-orientation purposes; its shape is square, whereas all other pads are circular. Pad A1 should not be soldered down to a corresponding pad on the carrier board.

External signals and pin multiplexing

The following tables provide the pinout information of the ConnectCore MP15 module. For additional information related to the signals listed in the table, refer to the STMicroelectronics STM32MP1 technical documentation.

Note See Limitations and notices for important information on designing your hardware.

Digi ConnectCore Smart IOmux tool

The Digi ConnectCore Smart IOmux tool can dramatically simplify pin configuration and resolution. You can enter the list of interfaces required by your project and use the Smart IOmux graphical interface to mock up configuration options, resulting in full pin assignment and device tree snippets that match your desired functionality. See the Smart IOmux User Guide for more information and download instructions.

Castellated pad signals and multiplexing

Castellated pad	ConnectCore MP15 pad	ConnectCore MP15 signal name	STM32MP1 pad name	Alternate functions	Additional functions	Power group	Comments
1 / B1	CPAD1	VCC_LICELL	VBAT	-	-	VCC_ LICELL	VCC_ LICELL pin can be supplied by an external battery. If external battery is not used, then connect this pin to VDD.
2 / C1	CPAD2	VSYS	-	-	-	VSYS	Input power line.
3 / D1	CPAD3	NC	-	-	-	-	
4 / E1	CPAD4	NC	-	-	-	-	
5 / F1	CPAD5	GND	-	-	-	-	
6 / G1	CPAD6	VSYS	-	-	-	VSYS	Input power line.
7 / H1	CPAD7	VSYS2	-	-	-	VSYS2	Input power line.
8 / J1	CPAD8	GND	-	-	-	-	
9 / K1	CPAD9	3V3	-	-	-	3V3	Output power line.
10 / L1	CPAD10	LTDC_G4	PH15	**AF3:** TIM8_CH3N	-	VDD	

Castellated pad	ConnectCore MP15 pad	ConnectCore MP15 signal name	STM32MP1 pad name	Alternate functions	Additional functions	Power group	Comments
				AF13: DCMI_D11 **AF14:** LCD_G4			
11 / M1	CPAD11	LTDC_G5	PF11	**AF5:** SPI5_MOSI **AF10:** SAI2_SD_B **AF13:** DCMI_D12 **AF14:** LCD_G5	ADC1_INP2	VDD	
12 / N1	CPAD12	NC	-	-	-	-	
13 / P1	CPAD13	NRST	NRST	-	-	-	Reset line of the module. Add an external 10K resistor to VDD.
14 / R1	CPAD14	I2S2_WS	PI0	**AF2:** TIM5_CH4 **AF5:** SPI2_NSS/I2S2_WS **AF13**: DCMI_D13 **AF14:** LCD_G5	-	VDD	
15 / T1	CPAD15	I2S2_CK	PI1	**AF3:** TIM8_BKIN2 **AF5:** SPI2_SCK/I2S2_CK **AF13:** DCMI_D8 **AF14:** LCD_G6	-	VDD	
16 / U1	CPAD16	SDMMC2_D1	PB15	**AF0:** RTC_REFIN **AF1:** TIM1_CH3N **AF2:** TIM12_CH2 **AF3:** TIM8_CH3N **AF4:** USART1_RX **AF5:** SPI2_MOSI/I2S2_SDO	-	VDD	

Castellated pad	ConnectCore MP15 pad	ConnectCore MP15 signal name	STM32MP1 pad name	Alternate functions	Additional functions	Power group	Comments
				AF6: DFSDM1_CKIN2 **AF9:** SDMMC2_D1			
17 / V1	CPAD17	SDMMC2_CMD	PG6	**AF0:** TRACED14 **AF1:** TIM17_BKIN **AF10:** SDMMC2_CMD **AF13:** DCMI_D12 **AF14:** LCD_R7	-	VDD	
18 / W1	CPAD18	PA13	PA13	**AF0:** DBTRGO **AF1:** DBTRGI **AF2:** MCO1 **AF8:** UART4_TX	BOOTFAILN	VDD	
19 / Y1	CPAD19	BOOT1	BOOT1	-	-	VDD	10K pull-up resistor.
20 / AA2	CPAD20	SDMMC2_D0	PB14	**AF1:** TIM1_CH2N **AF2:** TIM12_CH1 **AF3:** TIM8_CH2N **AF4:** USART1_TX **AF5:** SPI2_ MISO/I2S2_SDI **AF6:** DFSDM1_ DATIN2 **AF7:** USART3_ RTS/USART3_DE **AF9:** SDMMC2_D0	-	VDD	
21 / AA3	CPAD21	SDMMC2_CLK	PE3	**AF0:** TRACED0 **AF4:** TIM15_BKIN **AF6:** SAI1_SD_B **AF9:** SDMMC2_CK **AF12:** FMC_A19	-	VDD	
22 / AA4	CPAD22	SDMMC2_D2	PB3	**AF0:** TRACED9 **AF1:** TIM2_CH2	-	VDD	

Castellated pad	ConnectCore MP15 pad	ConnectCore MP15 signal name	STM32MP1 pad name	Alternate functions	Additional functions	Power group	Comments
				AF4: SAI4_CK1 **AF5:** SPI1_SCK/I2S1_CK **AF6:** SPI3_SCK/I2S3_CK **AF8:** SPI6_SCK **AF9:** SDMMC2_D2 **AF12:** SAI4_MCLK_A **AF13:** UART7_RX			
23 / AA5	CPAD23	SDMMC2_D3	PB4	**AF0:** TRACED8 **AF1:** TIM16_BKIN **AF2:** TIM3_CH1 **AF4:** SAI4_CK2 **AF5:** SPI1_MISO/I2S1_SDI **AF6:** SPI3_MISO/I2S3_SDI **AF7:** SPI2_NSS/I2S2_WS **AF8:** SPI6_MISO **AF9:** SDMMC2_D3 **AF12:** SAI4_SCK_A **AF13:** UART7_TX	-	VDD	
24 / AA6	CPAD24	UART4_TX	PG11	**AF0:** TRACED11 **AF4:** USART1_TX **AF6:** UART4_TX **AF8:** SPDIFRX_IN1 **AF11:** ETH1_GMII_TX_EN/ETH1_MII_TX_EN/ETH1_RGMII_TX_CTL/ETH1_RMII_TX_EN **AF13:** DCMI_D3	-	VDD	

Castellated pad	ConnectCore MP15 pad	ConnectCore MP15 signal name	STM32MP1 pad name	Alternate functions	Additional functions	Power group	Comments
				AF14: LCD_B3			
25 / AA7	CPAD25	UART4_RX	PB2	**AF0:** TRACED4 **AF1:** RTC_OUT2 **AF2:** SAI1_D1 **AF3:** DFSDM1_CKIN1 **AF4:** USART1_RX **AF5:** I2S_CKIN **AF6:** SAI1_SD_A **AF7:** SPI3_ MOSI/I2S3_SDO **AF8:** UART4_RX **AF9:** QUADSPI_CLK	-	VDD	
26 / AA8	CPAD26	USB2_D_P	USB_DP2	-	USBH_HS_DP2 OTG_HS_DP	-	
27 / AA9	CPAD27	USB2_D_N	USB_DM2	-	USBH_HS_ DM2 OTG_HS_DM	-	
28 / AA10	CPAD28	GND	-	-	-	-	
29 / AA11	CPAD29	OTG_VBUS	OTG_VBUS	-	OTG_FS_ VBUS OTG_HS_ VBUS	-	Input power line.
30 / AA12	CPAD30	I2S2_SDI	PI2	**AF3:** TIM8_CH4 **AF5:** SPI2_ MISO/I2S2_SDI **AF13:** DCMI_D9 **AF14:** LCD_G7	-	VDD	
31 / AA13	CPAD31	USB_OTG_ID	PA10	**AF1:** TIM1_CH3 **AF5:** SPI3_NSS/I2S3_ WS	OTG_FS_ID OTG_HS_ID	-	

Castellated pad	ConnectCore MP15 pad	ConnectCore MP15 signal name	STM32MP1 pad name	Alternate functions	Additional functions	Power group	Comments
				AF7: USART1_RX **AF11:** MDIOS_MDIO **AF12:** SAI4_FS_B **AF13:** DCMI_D1 **AF14:** LCD_B1			
32 / AA14	CPAD32	I2S2_SDO	PI3	**AF3:** TIM8_ETR **AF5:** SPI2_ MOSI/I2S2_SDO **AF13:** DCMI_D10	-	VDD	
33 / AA15	CPAD33	BOOT2	BOOT2	-	-	VDD	
34 / AA16	CPAD34	JTMS-SWDIO	JTMS-SWDIO	-	-	-	
35 / AA17	CPAD35	USB1_D_P	USB_DP1	-	USBH_HS_DP1	-	
36 / AA18	CPAD36	USB1_D_N	USB_DM1	-	USBH_HS_ DM1	-	
37 / AA19	CPAD37	ETH1_MDC	PC1	**AF0:** TRACED0 **AF2:** SAI1_D1 **AF3:** DFSDM1_ DATIN0 **AF4:** DFSDM1_CKIN4 **AF5:** SPI2_ MOSI/I2S2_SDO **AF6:** SAI1_SD_A **AF9:** SDMMC2_CK **AF11:** ETH1_MDC **AF12:** MDIOS_MDC	ADC1_INP11 ADC1_INN10 ADC2_INP11 ADC2_INN10 TAMP_IN3 WKUP6	VDD	
38 / AA20	CPAD38	ETH1_MDIO	PA2	**AF1:** TIM2_CH3 **AF2:** TIM5_CH3 **AF3:** LPTIM4_OUT **AF4:** TIM15_CH1 **AF7:** USART2_TX	ADC1_INP14 WKUP2	VDD	

Castellated pad	ConnectCore MP15 pad	ConnectCore MP15 signal name	STM32MP1 pad name	Alternate functions	Additional functions	Power group	Comments
				AF8: SAI2_SCK_B **AF10:** SDMMC2_D0DIR **AF11:** ETH1_MDIO **AF12:** MDIOS_MDIO **AF14:** LCD_R1			
39 / Y21	CPAD39	JTDO-TRACESWO	JTDO-TRACESWO	-	-	-	
40 / W21	CPAD40	JTCK-SWCLK	JTCK-SWCLK	-	-	-	
41 / V21	CPAD41	JTDI	JTDI	-	-	-	
42 / U21	CPAD42	JTRST	JTRST	-	-	-	
43 / T21	CPAD43	USART3_TX	PD8	**AF3:** DFSDM1_CKIN3 **AF6:** SAI3_SCK_B **AF7:** USART3_TX **AF9:** SPDIFRX_IN2 **AF12:** FMC_AD13/FMC_D13 **AF14:** LCD_B7	-	VDD	
44 / R21	CPAD44	USART3_RX	PB12	**AF1:** TIM1_BKIN **AF2:** I2C6_SMBA **AF4:** I2C2_SMBA **AF5:** SPI2_NSS/I2S2_WS **AF6:** DFSDM1_CKIN7 **AF7:** USART3_CK **AF8:** USART3_RX **AF9:** FDCAN2_RX **AF11:** ETH1_GMII_TXD0/ETH1_MII_TXD0/ETH1_RGMII_	-	VDD	

Castellated pad	ConnectCore MP15 pad	ConnectCore MP15 signal name	STM32MP1 pad name	Alternate functions	Additional functions	Power group	Comments
				TXD0/ETH1_RMII_TXD0 **AF14:** UART5_RX			
45 / P21	CPAD45	GND	-	-	-	-	
46 / N21	CPAD46	USART3_RTS	PG8	**AF0:** TRACED15 **AF1:** TIM2_CH1/TIM2_ETR **AF2:** ETH_CLK **AF3:** TIM8_ETR **AF5:** SPI6_NSS **AF6:** SAI4_D2 **AF7:** USART6_RTS/USART6_DE **AF8:** USART3_RTS/USART3_DE **AF9:** SPDIFRX_IN3 **AF10:** SAI4_FS_A **AF11:** ETH1_PPS_OUT **AF14:** LCD_G7	-	VDD	
47 / M21	CPAD47	USART3_CTS	PB13	**AF1:** TIM1_CH1N **AF3:** DFSDM1_CKOUT **AF4:** LPTIM2_OUT **AF5:** SPI2_SCK/I2S2_CK **AF6:** DFSDM1_CKIN1 **AF7:** USART3_CTS/USART3_NSS **AF9:** FDCAN2_TX **AF11:** ETH1_GMII_TXD1/ETH1_MII_	-	VDD	

Castellated pad	ConnectCore MP15 pad	ConnectCore MP15 signal name	STM32MP1 pad name	Alternate functions	Additional functions	Power group	Comments
				TXD1/ETH1_RGMII_TXD1/ETH1_RMII_TXD1 **AF14:** UART5_TX			
48 / L21	CPAD48	ETH1_RXD0	PC4	**AF3:** DFSDM1_CKIN2 **AF5:** I2S1_MCK **AF9:** SPDIFRX_IN3 **AF11:** ETH1_GMII_RXD0/ETH1_MII_RXD0/ETH1_RGMII_RXD0/ETH1_RMII_RXD0	ADC1_INP4 ADC2_INP4	VDD	
49 / K21	CPAD49	ETH1_RX_DV	PA7	**AF1:** TIM1_CH1N **AF2:** TIM3_CH2 **AF3:** TIM8_CH1N **AF4:** SAI4_D1 **AF5:** SPI1_MOSI/I2S1_SDO **AF8:** SPI6_MOSI **AF9:** TIM14_CH1 **AF10:** QUADSPI_CLK **AF11:** ETH1_GMII_RX_DV/ETH1_MII_RX_DV/ETH1_RGMII_RX_CTL/ETH1_RMII_CRS_DV **AF12:** SAI4_SD_A	ADC1_INP7 ADC1_INN3 ADC2_INP7 ADC2_INN3	VDD	
50 / J21	CPAD50	ETH1_RX_ER	PB10	**AF1:** TIM2_CH3 **AF3:** LPTIM2_IN1 **AF4:** I2C2_SCL **AF5:** SPI2_SCK/I2S2_CK	-	VDD	

Castellated pad	ConnectCore MP15 pad	ConnectCore MP15 signal name	STM32MP1 pad name	Alternate functions	Additional functions	Power group	Comments
				AF6: DFSDM1_DATIN7 **AF7:** USART3_TX **AF9:** QUADSPI_BK1_NCS **AF11:** ETH1_GMII_RX_ER/ETH1_MII_RX_ER **AF14:** LCD_G4			
51 / H21	CPAD51	ETH1_TXD1	PG14	**AF0:** TRACED1 **AF1:** LPTIM1_ETR **AF5:** SPI6_MOSI **AF6:** SAI4_DI **AF7:** USART6_TX **AF9:** QUADSPI_BK2_IO3 **AF10:** SAI4_SD_A **AF11:** ETH1_GMII_TXD1/ETH1_MII_TXD1/ETH1_RGMII_TXD1/ETH1_RMII_TXD1 **AF12:** FMC_A25 **AF14:** LCD_B0	-	VDD	
52 / G21	CPAD52	ETH1_TX_EN	PB11	**AF1:** TIM2_CH4 **AF3:** LPTIM2_ETR **AF4:** I2C2_SDA **AF6:** DFSDM1_CKIN7 **AF7:** USART3_RX **AF11:** ETH1_GMII_TX_EN/ETH1_MII_TX_EN/ETH1_RGMII_TX_CTL/ETH1_RMII_TX_	-	VDD	

Castellated pad	ConnectCore MP15 pad	ConnectCore MP15 signal name	STM32MP1 pad name	Alternate functions	Additional functions	Power group	Comments
				EN **AF13:** DSI_TE **AF14:** LCD_G5			
53 / F21	CPAD53	ETH1_REF_CLK	PA1	**AF0:** ETH_CLK **AF1:** TIM2_CH2 **AF2:** TIM5_CH2 **AF3:** LPTIM3_OUT **AF4:** TIM15_CH1N **AF7:** USART2_RTS/USART2_DE **AF8:** UART4_RX **AF9:** QUADSPI_BK1_IO3 **AF10:** SAI2_MCLK_B **AF11:** ETH1_GMII_RX_CLK/ETH1_MII_RX_CLK/ETH1_RGMII_RX_CLK/ETH1_RMII_REF_CLK **AF14:** LCD_R2	ADC1_INP17 ADC1_INN16	VDD	
54 / E21	CPAD54	ETH1_RXD1	PC5	**AF2:** SAI1_D3 **AF3:** DFSDM1_DATIN2 **AF4:** SAI4_D4 **AF6:** SAI1_D4 **AF9:** SPDIFRX_IN4 **AF11:** ETH1_GMII_RXD1/ETH1_MII_RXD1/ETH1_RGMII_RXD1/ETH1_RMII_RXD1 **AF12:** SAI4_D3	ADC1_INP8 ADC1_INN4 ADC2_INP8 ADC2_INN4	VDD	

Castellated pad	ConnectCore MP15 pad	ConnectCore MP15 signal name	STM32MP1 pad name	Alternate functions	Additional functions	Power group	Comments
55 / D21	CPAD55	ETH1_TXD0	PG13	**AF0:** TRACED0 **AF1:** LPTIM1_OUT **AF2:** SAI1_CK2 **AF4:** SAI4_CK1 **AF5:** SPI6_SCK **AF6:** SAI1_SCK_A **AF7:** USART6_CTS/USART6_NSS **AF10:** SAI4_MCLK_A **AF11:** ETH1_GMII_TXD0/ETH1_MII_TXD0/ETH1_RGMII_TXD0/ETH1_RMII_TXD0 **AF12:** FMC_A24 **AF14:** LCD_R0	-	VDD	
56 / C21	CPAD56	LTDC_CLK	PG7	**AF0:** TRACED5 **AF6:** SAI1_MCLK_A **AF7:** USART6_CK **AF8:** UART8_RTS/UART8_DE **AF9:** QUADSPI_CLK **AF11:** QUADSPI_BK2_IO3 **AF13:** DCMI_D13 **AF14:** LCD_CLK	-	VDD	
57 / B21	CPAD57	LTDC_HSYNC	PI10	**AF0:** HDP0 **AF8:** USART3_CTS/USART3_NSS **AF11:** ETH1_GMII_RX_ER/ETH1_MII_RX_ER **AF14:** LCD_HSYNC	-	VDD	

Castellated pad	ConnectCore MP15 pad	ConnectCore MP15 signal name	STM32MP1 pad name	Alternate functions	Additional functions	Power group	Comments
58 / A20	CPAD58	LTDC_B6	PI6	**AF3:** TIM8_CH2 **AF10:** SAI2_SD_A **AF13:** DCMI_D6 **AF14:** LCD_B6	-	VDD	
59 / A19	CPAD59	LTDC_B0	PE4	**AF0:** TRACED1 **AF2:** SAI1_D2 **AF3:** DFSDM1_DATIN3 **AF4:** TIM15_CH1N **AF5:** SPI4_NSS **AF6:** SAI1_FS_A **AF7:** SDMMC2_CKIN **AF8:** SDMMC1_CKIN **AF9:** SDMMC2_D4 **AF11:** SDMMC1_D4 **AF12:** FMC_A20 **AF13:** DCMI_D4 **AF14:** LCD_B0	-	VDD	
60 / A18	CPAD60	LTDC_B2	PA3	**AF1:** TIM2_CH4 **AF2:** TIM5_CH4 **AF3:** LPTIM5_OUT **AF4:** TIM15_CH2 **AF7:** USART2_RX **AF9:** LCD_B2 **AF11:** ETH1_GMII_COL/ETH1_MII_COL **AF14:** LCD_B5	ADC1_INP15 PVD_IN	VDD	
61 / A17	CPAD61	LTDC_B5	PI5	**AF3:** TIM8_CH1 **AF10:** SAI2_SCK_A **AF13:** DCMI_VSYNC **AF14:** LCD_B5	-	VDD	
62 / A16	CPAD62	LTDC_G2	PH13	**AF3:** TIM8_CH1N	-	VDD	

Castellated pad	ConnectCore MP15 pad	ConnectCore MP15 signal name	STM32MP1 pad name	Alternate functions	Additional functions	Power group	Comments
				AF8: UART4_TX **AF9:** FDCAN1_TX **AF14:** LCD_G2			
63 / A15	CPAD63	LTDC_G3	PG10	**AF0:** TRACED10 **AF8:** UART8_CTS **AF9:** LCD_G3 **AF10:** SAI2_SD_B **AF11:** QUADSPI_BK2_IO2 **AF12:** FMC_NE3 **AF13:** DCMI_D2 **AF14:** LCD_B2	-	VDD	
64 / A14	CPAD64	LTDC_B7	PI7	**AF3:** TIM8_CH3 **AF10:** SAI2_FS_A **AF13:** DCMI_D7 **AF14:** LCD_B7	-	VDD	
65 / A13	CPAD65	GND	-	-	-	-	
66 / A12	CPAD66	LTDC_B4	PI4	**AF3:** TIM8_BKIN **AF10:** SAI2_MCLK_A **AF13:** DCMI_D5 **AF14:** LCD_B4	-	VDD	
67 / A11	CPAD67	LTDC_VSYNC	PI9	**AF0:** HDP1 **AF1:** UART4_RX **AF9:** FDCAN1_RX **AF14:** LCD_VSYNC	-	VDD	
68 / A10	CPAD68	LTDC_B3	PD10	**AF0:** RTC_REFIN **AF1:** TIM16_BKIN **AF3:** DFSDM1_CKOUT **AF4:** I2C5_SMBA **AF5:** SPI3_	-	VDD	

Castellated pad	ConnectCore MP15 pad	ConnectCore MP15 signal name	STM32MP1 pad name	Alternate functions	Additional functions	Power group	Comments
				MISO/I2S3_SDI **AF6:** SAI3_FS_B **AF7:** USART3_CK **AF12:** FMC_ AD15/FMC_D15 **AF14:** LCD_B3			
69 / A9	CPAD69	LTDC_DE	PF10	**AF1:** TIM16_BKIN **AF2:** SAI1_D3 **AF3:** SAI4_D4 **AF6:** SAI1_D4 **AF9:** QUADSPI_CLK **AF12:** SAI4_D3 **AF13:** DCMI_D11 **AF14:** LCD_DE	-	VDD	
70 / A8	CPAD70	NC	-	-	-	-	
71 / A7	CPAD71	NC	-	-	-	-	
72 / A6	CPAD72	NC	-	-	-	-	
73 / A5	CPAD73	NC	-	-	-	-	
74 / A4	CPAD74	NC	-	-	-	-	
75 / A3	CPAD75	NC	-	-	-	-	
76 / A2	CPAD76	NC	-	-	-	-	

LGA pad signals and multiplexing

LGA pad	ConnectCore MP15 pad	ConnectCore MP15 signal name	STM32MP157 pad name	Alternate functions	Additional functions	Power group	Comments
A2	LGA_A2	NC	-	-	-	-	
A3	LGA_A3	NC	-	-	-	-	
A4	LGA_A4	NC	-	-	-	-	
A5	LGA_A5	NC	-	-	-	-	
A6	LGA_A6	NC	-	-	-	-	
A7	LGA_A7	NC	-	-	-	-	
A8	LGA_A8	NC	-	-	-	-	
A9	LGA_A9	LTDC_DE	PF10	**AF1:** TIM16_BKIN **AF2:** SAI1_D3 **AF3:** SAI4_D4 **AF6:** SAI1_D4 **AF9:** QUADSPI_CLK **AF12:** SAI4_D3 **AF13:** DCMI_D11 **AF14:** LCD_DE	-	VDD	
A10	LGA_A10	LTDC_B3	PD10	**AF0:** RTC_REFIN **AF1:** TIM16_BKIN **AF3:** DFSDM1_CKOUT **AF4:** I2C5_SMBA **AF5:** SPI3_MISO/I2S3_SDI **AF6:** SAI3_FS_B **AF7:** USART3_CK **AF12:** FMC_	-	VDD	

LGA pad	ConnectCore MP15 pad	ConnectCore MP15 signal name	STM32MP157 pad name	Alternate functions	Additional functions	Power group	Comments
				AD15/FMC_D15 **AF14:** LCD_B3			
A11	LGA_A11	LTDC_VSYNC	PI9	**AF0:** HDP1 **AF1:** UART4_RX **AF9:** FDCAN1_RX **AF14:** LCD_VSYNC	-	VDD	
A12	LGA_A12	LTDC_B4	PI4	**AF3:** TIM8_BKIN **AF10:** SAI2_MCLK_A **AF13:** DCMI_D5 **AF14:** LCD_B4	-	VDD	
A13	LGA_A13	GND	-	-	-	-	
A14	LGA_A14	LTDC_B7	PI7	**AF3:** TIM8_CH3 **AF10:** SAI2_FS_A **AF13:** DCMI_D7 **AF14:** LCD_B7	-	VDD	
A15	LGA_A15	LTDC_G3	PG10	**AF0:** TRACED10 **AF8:** UART8_CTS **AF9:** LCD_G3 **AF10:** SAI2_SD_B **AF11:** QUADSPI_BK2_IO2 **AF12:** FMC_NE3 **AF13:** DCMI_D2 **AF14:** LCD_B2	-	VDD	
A16	LGA_A16	LTDC_G2	PH13	**AF3:** TIM8_CH1N **AF8:** UART4_TX **AF9:** FDCAN1_TX **AF14:** LCD_G2	-	VDD	
A17	LGA_A17	LTDC_B5	PI5	**AF3:** TIM8_CH1	-	VDD	

LGA pad	ConnectCore MP15 pad	ConnectCore MP15 signal name	STM32MP157 pad name	Alternate functions	Additional functions	Power group	Comments
				AF10: SAI2_SCK_A **AF13:** DCMI_VSYNC **AF14:** LCD_B5			
A18	LGA_A18	LTDC_B2	PA3	**AF1:** TIM2_CH4 **AF2:** TIM5_CH4 **AF3:** LPTIM5_OUT **AF4:** TIM15_CH2 **AF7:** USART2_RX **AF9:** LCD_B2 **AF11:** ETH1_GMII_COL/ETH1_MII_COL **AF14:** LCD_B5	ADC1_INP15 PVD_IN	VDD	
A19	LGA_A19	LTDC_B0	PE4	**AF0:** TRACED1 **AF2:** SAI1_D2 **AF3:** DFSDM1_DATIN3 **AF4:** TIM15_CH1N **AF5:** SPI4_NSS **AF6:** SAI1_FS_A **AF7:** SDMMC2_CKIN **AF8:** SDMMC1_CKIN **AF9:** SDMMC2_D4 **AF11:** SDMMC1_D4 **AF12:** FMC_A20 **AF13:** DCMI_D4 **AF14:** LCD_B0	-	VDD	
A20	LGA_ A20	LTDC_B6	PI6	**AF3:** TIM8_CH2 **AF10:** SAI2_SD_A **AF13:** DCMI_D6 **AF14:** LCD_B6	-	VDD	
A21	LGA_A21	GND	-	-	-	-	

LGA pad	ConnectCore MP15 pad	ConnectCore MP15 signal name	STM32MP157 pad name	Alternate functions	Additional functions	Power group	Comments
B1	LGA_B1	VCC_LICELL	VBAT	-	-	-	VCC_LICELL pin can be supplied by an external battery. If external battery is not used, then connect this pin to VDD.
B2	LGA_B2	NC	-	-	-	-	
B3	LGA_B3	DCMI_D3	PE1	**AF1:** LPTIM1_IN2 **AF5:** I2S2_MCK **AF6:** SAI3_SD_B **AF8:** UART8_TX **AF12:** FMC_NBL1 **AF13:** DCMI_D3	-	VDD	
B4	LGA_B4	DCMI_D4	PH14	**AF3:** TIM8_CH2N **AF8:** UART4_RX **AF9:** FDCAN1_RX **AF13:** DCMI_D4 **AF14:** LCD_G3	-	VDD	
B5	LGA_B5	NC	-	-	-	-	
B6	LGA_B6	NC	-	-	-	-	
B7	LGA_B7	RESERVED	-	-	-	-	Reserved pad.
B8	LGA_B8	DCMI_D1	PH10	**AF2:** TIM5_CH1 **AF4:** I2C4_SMBA **AF5:** I2C1_SMBA **AF13:** DCMI_D1 **AF14:** LCD_R4	-	VDD	
B9	LGA_B9	DCMI_D2	PH11	**AF2:** TIM5_CH2	-	VDD	

LGA pad	ConnectCore MP15 pad	ConnectCore MP15 signal name	STM32MP157 pad name	Alternate functions	Additional functions	Power group	Comments
				AF4: I2C4_SCL **AF5:** I2C1_SCL **AF13:** DCMI_D2 **AF14:** LCD_R5			
B10	LGA_B10	DCMI_VSYNC	PB7	**AF1:** TIM17_CH1N **AF2:** TIM4_CH2 **AF4:** I2C1_SDA **AF6:** I2C4_SDA **AF7:** USART1_RX **AF10:** SDMMC2_D1 **AF11:** DFSDM1_CKIN5 **AF12:** FMC_NL **AF13:** DCMI_VSYNC	-	VDD	
B11	LGA_B11	DCMI_HSYNC	PD9	**AF3:** DFSDM1_ DATIN3 **AF6:** SAI3_SD_B **AF7:** USART3_RX **AF12:** FMC_ AD14/FMC_D14 **AF13:** DCMI_HSYNC **AF14:** LCD_B0	-	VDD	
B12	LGA_B12	GND	-	-	-	-	
B13	LGA_B13	RF_ANT_EXT	-	-	-	-	External antenna pad. This signal is disconnected inside the module.
B14	LGA_B14	GND	-	-	-	-	
B15	LGA_B15	NC	-	-	-	-	

LGA pad	ConnectCore MP15 pad	ConnectCore MP15 signal name	STM32MP157 pad name	Alternate functions	Additional functions	Power group	Comments
B16	LGA_B16	GND	-	-	-	-	
B17	LGA_B17	NC	-	-	-	-	
B18	LGA_B18	NC	-	-	-	-	
B19	LGA_B19	NC	-	-	-	-	
B20	LGA_B20	NC	-	-	-	-	
B21	LGA_B21	LTDC_HSYNC	PI10	**AF0:** HDP0 **AF8:** USART3_CTS/USART3_NSS **AF11:** ETH1_GMII_RX_ER/ETH1_MII_RX_ER **AF14:** LCD_HSYNC	-	VDD	
C1	LGA_C1	VSYS	-	-	-	VSYS	Input power line.
C2	LGA_C2	VSYS	-	-	-	VSYS	Input power line.
C3	LGA_C3	NC	-	-	-	-	
C4	LGA_C4	NC	-	-	-	-	
C5	LGA_C5	GND	-	-	-	-	
C6	LGA_C6	DSI_CK_P	DSI_CK_P	-	-	VDD	
C7	LGA_C7	DSI_D0_P	DSI_D0_P	-	-	VDD	
C8	LGA_C8	DSI_D0_N	DSI_D0_N	-	-	VDD	
C9	LGA_C9	DSI_D1_P	DSI_D1_P	-	-	VDD	
C10	LGA_C10	DSI_D1_N	DSI_D1_N	-	-	VDD	

LGA pad	ConnectCore MP15 pad	ConnectCore MP15 signal name	STM32MP157 pad name	Alternate functions	Additional functions	Power group	Comments
C11	LGA_C11	GND	-	-	-	-	
C12	LGA_C12	NC	-	-	-	-	
C13	LGA_C13	GND	-	-	-	-	
C14	LGA_C14	PG3	PG3	**AF0:** TRACED3 **AF3:** TIM8_BKIN2 **AF4:** DFSDM1_CKIN1 **AF11:** ETH1_GMII_TXD7 **AF12:** FMC_A13	-	VDD	
C15	LGA_C15	PG2	PG2	**AF0:** TRACED2 **AF1:** MCO2 **AF3:** TIM8_BKIN **AF11:** ETH1_GMII_TXD6 **AF12:** FMC_A12	-	VDD	
C16	LGA_C16	PI8	PI8	-	RTC_OUT2/ RTC_LSCO TAMP_IN2/ TAMP_OUT3 WKUP4	VDD	
C17	LGA_C17	PCM_OUT	-	-	-	-	Signal connected to the Wireless MAC.
C18	LGA_C18	PCM_SYNC	-	-	-	-	Signal connected to the Wireless MAC.
C19	LGA_C19	GND	-	-	-	-	

LGA pad	ConnectCore MP15 pad	ConnectCore MP15 signal name	STM32MP157 pad name	Alternate functions	Additional functions	Power group	Comments
C20	LGA_C20	PCM_CLK	-	-	-	-	Signal connected to the Wireless MAC.
C21	LGA_C21	LTDC_CLK	PG7	**AF0:** TRACED5 **AF6:** SAI1_MCLK_A **AF7:** USART6_CK **AF8:** UART8_RTS/UART8_DE **AF9:** QUADSPI_CLK **AF11:** QUADSPI_BK2_IO3 **AF13:** DCMI_D13 **AF14:** LCD_CLK	-	VDD	
D1	LGA_D1	NC	-	-	-	-	
D2	LGA_D2	GND	-	-	-	-	
D3	LGA_D3	LDO2	-	-	-	LDO2	Output power line.
D4	LGA_D4	LDO6	-	-	-	LDO6	Output power line.
D5	LGA_D5	GND	-	-	-	-	
D6	LGA_D6	DSI_CK_N	DSI_CK_N	-	-	VDD	
D7	LGA_D7	GND	-	-	-	-	
D8	LGA_D8	NC	-	-	-	-	
D9	LGA_D9	NC	-	-	-	-	
D10	LGA_D10	GND	-	-	-	-	
D11	LGA_D11	DCMI_PIXCLK	PA6	**AF1:** TIM1_BKIN **AF2:** TIM3_CH1	ADC1_INP3 ADC2_INP3	VDD	

LGA pad	ConnectCore MP15 pad	ConnectCore MP15 signal name	STM32MP157 pad name	Alternate functions	Additional functions	Power group	Comments
				AF3: TIM8_BKIN **AF4:** SAI4_CK2 **AF5:** SPI1_MISO/I2S1_SDI **AF8:** SPI6_MISO **AF9:** TIM13_CH1 **AF11:** MDIOS_MDC **AF12:** SAI4_SCK_A **AF13:** DCMI_PIXCLK **AF14:** LCD_G2			
D12	LGA_D12	VDD_SD	-	-	-	VDD_SD	Output power line.
D13	LGA_D13	NC	-	-	-	-	
D14	LGA_D14	NC	-	-	-	-	
D15	LGA_D15	BT_DEV_WAKE	-	-	-	-	Signal connected to the Wireless MAC.
D16	LGA_D16	BT_UART_CTS	PA11	**AF1:** TIM1_CH4 **AF2:** I2C6_SCL **AF4:** I2C5_SCL **AF5:** SPI2_NSS/I2S2_WS **AF6:** UART4_RX **AF7:** USART1_CTS/USART1_NSS **AF9:** FDCAN1_RX **AF14:** LCD_R4	OTG_FS_DM	VDD	Signal only available in non-wireless variants.
D17	LGA_D17	BT_UART_TX	PZ7	**AF2:** I2C6_SDA **AF3:** I2C2_SDA **AF7:** USART1_TX	-	VDD	Signal only available in non-wireless variants.

LGA pad	ConnectCore MP15 pad	ConnectCore MP15 signal name	STM32MP157 pad name	Alternate functions	Additional functions	Power group	Comments
D18	LGA_D18	BT_UART_RX	PZ1	**AF2:** I2C6_SDA **AF3:** I2C2_SDA **AF4:** I2C5_SDA **AF5:** SPI1_MISO/I2S1_SDI **AF6:** I2C4_SDA **AF7:** USART1_RX **AF8:** SPI6_MISO	-	VDD	Signal only available in non-wireless variants.
D19	LGA_D19	BT_UART_RTS	PA12	**AF1:** TIM1_ETR **AF2:** I2C6_SDA **AF4:** I2C5_SDA **AF6:** UART4_TX **AF7:** USART1_RTS/USART1_DE **AF8:** SAI2_FS_B **AF9:** FDCAN1_TX **AF14:** LCD_R5	OTG_FS_DP	VDD	Signal only available in non-wireless variants.
D20	LGA_D20	PCM_IN	-	-	-	-	Signal connected to the Wireless MAC.
D21	LGA_D21	ETH1_TXD0	PG13	**AF0:** TRACED0 **AF1:** LPTIM1_OUT **AF2:** SAI1_CK2 **AF4:** SAI4_CK1 **AF5:** SPI6_SCK **AF6:** SAI1_SCK_A **AF7:** USART6_CTS/USART6_NSS **AF10:** SAI4_MCLK_A **AF11:** ETH1_GMII_TXD0/ETH1_MII_TXD0/ETH1_RGMII_	-	VDD	

LGA pad	ConnectCore MP15 pad	ConnectCore MP15 signal name	STM32MP157 pad name	Alternate functions	Additional functions	Power group	Comments
				TXD0/ETH1_RMII_TXD0 **AF12:** FMC_A24 **AF14:** LCD_R0			
E1	LGA_E1	NC	-	-	-	-	PMIC External LDO gate control line.
E2	LGA_E2	WKUP	PA0	**AF1:** TIM2_CH1/TIM2_ETR **AF2:** TIM5_CH1 **AF3:** TIM8_ETR **AF4:** TIM15_BKIN **AF7:** USART2_CTS/USART2_NSS **AF8:** UART4_TX **AF9:** SDMMC2_CMD **AF10:** SAI2_SD_B **AF11:** ETH1_GMII_CRS/ETH1_MII_CRS	ADC1_INP16 WKUP1	VDD	
E3	LGA_E3	VDD	-	-	-	VDD	Output power line. Recommendation is not to use this pad externally. See Output power rails.
E19	LGA_E19	PE0	PE0	**AF1:** LPTIM1_ETR **AF2:** TIM4_ETR **AF4:** LPTIM2_ETR **AF5:** SPI3_SCK/I2S3_CK **AF6:** SAI4_MCLK_B **AF8:** UART8_RX	-	VDD	

LGA pad	ConnectCore MP15 pad	ConnectCore MP15 signal name	STM32MP157 pad name	Alternate functions	Additional functions	Power group	Comments
				AF10: SAI2_MCLK_A **AF12:** FMC_NBL0 **AF13:** DCMI_D2			
E20	LGA_E20	WL_REG_EN	PD13	**AF1:** LPTIM1_OUT **AF2:** TIM4_CH2 **AF4:** I2C4_SDA **AF5:** I2C1_SDA **AF6:** I2S3_MCK **AF9:** QUADSPI_BK1_IO3 **AF10:** SAI2_SCK_A **AF12:** FMC_A18 **AF13:** DSI_TE	-	VDD	Signal only available in non-wireless variants.
E21	LGA_E21	ETH1_RXD1	PC5	**AF2:** SAI1_D3 **AF3:** DFSDM1_DATIN2 **AF4:** SAI4_D4 **AF6:** SAI1_D4 **AF9:** SPDIFRX_IN4 **AF11:** ETH1_GMII_RXD1/ETH1_MII_RXD1/ETH1_RGMII_RXD1/ETH1_RMII_RXD1 **AF12:** SAI4_D3	ADC1_INP8 ADC1_INN4 ADC2_INP8 ADC2_INN4	VDD	
F1	LGA_F1	GND	-	-	-	-	
F2	LGA_F2	GND	-	-	-	-	
F3	LGA_F3	VSYS	-	-	-	VSYS	Input power line.
F19	LGA_F19	WL_HOST_	-	-	-	-	Signal connected

LGA pad	ConnectCore MP15 pad	ConnectCore MP15 signal name	STM32MP157 pad name	Alternate functions	Additional functions	Power group	Comments
		WAKE					to the Wireless MAC.
F20	LGA_F20	PZ2	PZ2	**AF2:** I2C6_SCL **AF3:** I2C2_SCL **AF4:** I2C5_SMBA **AF5:** SPI1_MOSI/I2S1_SDO **AF6:** I2C4_SMBA **AF7:** USART1_TX **AF8:** SPI6_MOSI	-	VDD	
F21	LGA_F21	ETH1_REF_CLK	PA1	**AF0:** ETH_CLK **AF1:** TIM2_CH2 **AF2:** TIM5_CH2 **AF3:** LPTIM3_OUT **AF4:** TIM15_CH1N **AF7:** USART2_RTS/USART2_DE **AF8:** UART4_RX **AF9:** QUADSPI_BK1_IO3 **AF10:** SAI2_MCLK_B **AF11:** ETH1_GMII_RX_CLK/ETH1_MII_RX_CLK/ETH1_RGMII_RX_CLK/ETH1_RMII_REF_CLK **AF14:** LCD_R2	ADC1_INP17 ADC1_INN16	VDD	
G1	LGA_G1	VSYS	-	-	-	VSYS	Input power line.
G2	LGA_G2	VSYS	-	-	-	VSYS	Input power line.

LGA pad	ConnectCore MP15 pad	ConnectCore MP15 signal name	STM32MP157 pad name	Alternate functions	Additional functions	Power group	Comments
G3	LGA_G3	VSYS	-	-	-	VSYS	Input power line.
G19	LGA_G19	BT_REG_EN	PZ6	**AF2:** I2C6_SCL **AF3:** I2C2_SCL **AF4:** USART1_CK **AF5:** I2S1_MCK **AF6:** I2C4_SMBA **AF7:** USART1_RX	-	VDD	Signal only available in non-wireless variants.
G20	LGA_G20	GND	-	-	-	-	
G21	LGA_G21	ETH1_TX_EN	PB11	**AF1:** TIM2_CH4 **AF3:** LPTIM2_ETR **AF4:** I2C2_SDA **AF6:** DFSDM1_CKIN7 **AF7:** USART3_RX **AF11:** ETH1_GMII_TX_EN/ETH1_MII_TX_EN/ETH1_RGMII_TX_CTL/ETH1_RMII_TX_EN **AF13:** DSI_TE **AF14:** LCD_G5	-	VDD	
H1	LGA_H1	VSYS2	-	-	-	VSYS2	Input power line.
H2	LGA_H2	VSYS2	-	-	-	VSYS2	Input power line.
H3	LGA_H3	VSYS2	-	-	-	VSYS2	Input power line.
H19	LGA_H19	PG0	PG0	**AF0:** TRACED0 **AF3:** DFSDM1_DATIN0 **AF11:** ETH1_GMII_TXD4 **AF12:** FMC_A10	-	VDD	

LGA pad	ConnectCore MP15 pad	ConnectCore MP15 signal name	STM32MP157 pad name	Alternate functions	Additional functions	Power group	Comments
H20	LGA_H20	BT_HOST_ WAKE	-	-	-	-	Signal connected to the Wireless MAC.
H21	LGA_H21	ETH1_TXD1	PG14	**AF0:** TRACED1 **AF1:** LPTIM1_ETR **AF5:** SPI6_MOSI **AF6:** SAI4_DI **AF7:** USART6_TX **AF9:** QUADSPI_BK2_ IO3 **AF10:** SAI4_SD_A **AF11:** ETH1_GMII_ TXD1/ETH1_MII_ TXD1/ETH1_RGMII_ TXD1/ETH1_RMII_ TXD1 **AF12:** FMC_A25 **AF14:** LCD_B0	-	VDD	
J1	LGA_J1	GND	-	-	-	-	
J2	LGA_J2	GND	-	-	-	-	
J3	LGA_J3	VSYS2	-	-	-	-	Input power line.
J19	LGA_J19	PF15	PF15	**AF0:** TRACED7 **AF4:** I2C4_SDA **AF5:** I2C1_SDA **AF11:** ETH1_GMII_ RXD7 **AF12:** FMC_A9	-	VDD	
J20	LGA_J20	3V3_RF_ EN/PF2	PF2	**AF4:** I2C2_SMBA **AF9:** SDMMC2_D0DIR	-	VDD	Signal only available in non-

LGA pad	ConnectCore MP15 pad	ConnectCore MP15 signal name	STM32MP157 pad name	Alternate functions	Additional functions	Power group	Comments
				AF10: SDMMC3_D0DIR **AF11:** SDMMC1_D0DIR **AF12:** FMC_A2			wireless variants.
J21	LGA_J21	ETH1_RX_ER	PB10	**AF1:** TIM2_CH3 **AF3:** LPTIM2_IN1 **AF4:** I2C2_SCL **AF5:** SPI2_SCK/I2S2_CK **AF6:** DFSDM1_DATIN7 **AF7:** USART3_TX **AF9:** QUADSPI_BK1_NCS **AF11:** ETH1_GMII_RX_ER/ETH1_MII_RX_ER **AF14:** LCD_G4	-	VDD	
K1	LGA_K1	3V3	-	-	-	3V3	Output power line.
K2	LGA_K2	3V3	-	-	-	3V3	Output power line.
K3	LGA_K3	3V3	-	-	-	3V3	Output power line.
K19	LGA_K19	WLAN_SD_CLK	PG15	**AF0:** TRACED7 **AF2:** SAI1_D2 **AF4:** I2C2_SDA **AF6:** SAI1_FS_A **AF7:** USART6_CTS/USART6_NSS **AF10:** SDMMC3_CK **AF13:** DCMI_D13	-	VDD	Signal only available in non-wireless variants.

LGA pad	ConnectCore MP15 pad	ConnectCore MP15 signal name	STM32MP157 pad name	Alternate functions	Additional functions	Power group	Comments
K20	LGA_K20	WLAN_SD_D2	PF5	**AF7:** USART2_TX **AF9:** SDMMC3_D2 **AF12:** FMC_A5	-	VDD	47K pull-up on module connected to 3V3. Signal only available in non-wireless variants.
K21	LGA_K21	ETH1_RX_DV	PA7	**AF1:** TIM1_CH1N **AF2:** TIM3_CH2 **AF3:** TIM8_CH1N **AF4:** SAI4_D1 **AF5:** SPI1_MOSI/I2S1_SDO **AF8:** SPI6_MOSI **AF9:** TIM14_CH1 **AF10:** QUADSPI_CLK **AF11:** ETH1_GMII_RX_DV/ETH1_MII_RX_DV/ETH1_RGMII_RX_CTL/ETH1_RMII_CRS_DV **AF12:** SAI4_SD_A	ADC1_INP7 ADC1_INN3 ADC2_INP7 ADC2_INN3	VDD	
L1	LGA_L1	LTDC_G4	PH15	**AF3:** TIM8_CH3N **AF13:** DCMI_D11 **AF14:** LCD_G4	-	VDD	
L2	LGA_L2	GND	-	-	-	-	
L3	LGA_L3	VREF+	VREF+	-	-	-	
L19	LGA_L19	WLAN_SD_CMD	PF1	**AF4:** I2C2_SCL **AF9:** SDMMC3_CMD **AF10:** SDMMC3_CDIR **AF12:** FMC_A1	-	VDD	47K pull-up on module connected to 3V3. Signal only

LGA pad	ConnectCore MP15 pad	ConnectCore MP15 signal name	STM32MP157 pad name	Alternate functions	Additional functions	Power group	Comments
							available in non-wireless variants.
L20	LGA_L20	WLAN_SD_D1	PF4	**AF7:** USART2_RX **AF9:** SDMMC3_D1 **AF10:** SDMMC3_D123DIR **AF12:** FMC_A4	-	VDD	47K pull-up on module connected to 3V3. Signal only available in non-wireless variants.
L21	LGA_L21	ETH1_RXD0	PC4	**AF3:** DFSDM1_CKIN2 **AF5:** I2S1_MCK **AF9:** SPDIFRX_IN3 **AF11:** ETH1_GMII_RXD0/ETH1_MII_RXD0/ETH1_RGMII_RXD0/ETH1_RMII_RXD0	ADC1_INP4 ADC2_INP4	VDD	
M1	LGA_M1	LTDC_G5	PF11	**AF5:** SPI5_MOSI **AF10:** SAI2_SD_B **AF13:** DCMI_D12 **AF14:** LCD_G5	ADC1_INP2	VDD	
M2	LGA_M2	DCMI_D0	PH9	**AF2:** TIM12_CH2 **AF4:** I2C3_SMBA **AF13:** DCMI_D0 **AF14:** LCD_R3	-	VDD	
M3	LGA_M3	DCMI_D5	PD3	**AF0:** HDP5 **AF3:** DFSDM1_CKOUT **AF5:** SPI2_SCK/I2S2_CK **AF6:** DFSDM1_DATIN0	-	VDD	

LGA pad	ConnectCore MP15 pad	ConnectCore MP15 signal name	STM32MP157 pad name	Alternate functions	Additional functions	Power group	Comments
				AF7: USART2_CTS/USART2_NSS **AF8:** SDMMC1_D123DIR **AF9:** SDMMC2_D7 **AF10:** SDMMC2_D123DIR **AF11:** SDMMC1_D7 **AF12:** FMC_CLK **AF13:** DCMI_D5 **AF14:** LCD_G7			
M19	LGA_M19	WLAN_SD_D0	PF0	**AF4:** I2C2_SDA **AF9:** SDMMC3_D0 **AF10:** SDMMC3_CKIN **AF12:** FMC_A0	-	VDD	47K pull-up on module connected to 3V3. Signal only available in non-wireless variants.
M20	LGA_M20	WLAN_SD_D3	PD7	**AF0:** TRACED6 **AF3:** DFSDM1_DATIN4 **AF4:** I2C2_SCL **AF6:** DFSDM1_CKIN1 **AF7:** USART2_CK **AF9:** SPDIFRX_IN1 **AF10:** SDMMC3_D3 **AF12:** FMC_NE1	-	VDD	47K pull-up on module connected to 3V3. Signal only available in non-wireless variants.
M21	LGA_M21	USART3_CTS	PB13	**AF1:** TIM1_CH1N **AF3:** DFSDM1_CKOUT **AF4:** LPTIM2_OUT **AF5:** SPI2_SCK/I2S2_CK **AF6:** DFSDM1_CKIN1	-	VDD	

LGA pad	ConnectCore MP15 pad	ConnectCore MP15 signal name	STM32MP157 pad name	Alternate functions	Additional functions	Power group	Comments
				AF7: USART3_CTS/USART3_NSS **AF9:** FDCAN2_TX **AF11:** ETH1_GMII_TXD1/ETH1_MII_TXD1/ETH1_RGMII_TXD1/ETH1_RMII_TXD1 **AF14:** UART5_TX			
N1	LGA_N1	NC	-	-	-	-	
N2	LGA_N2	DCMI_D6	PB8	**AF0:** HDP6 **AF1:** TIM16_CH1 **AF2:** TIM4_CH3 **AF3:** DFSDM1_CKIN7 **AF4:** I2C1_SCL **AF5:** SDMMC1_CKIN **AF6:** I2C4_SCL **AF7:** SDMMC2_CKIN **AF8:** UART4_RX **AF9:** FDCAN1_RX **AF10:** SDMMC2_D4 **AF11:** ETH1_GMII_TXD3/ETH1_MII_TXD3/ETH1_RGMII_TXD3 **AF12:** SDMMC1_D4 **AF13:** DCMI_D6 **AF14:** LCD_B6	-	VDD	
N3	LGA_N3	GND	-		-	-	
N19	LGA_N19	SPI4_MOSI	PE14	**AF1:** TIM1_CH4 **AF5:** SPI4_MOSI	-	VDD	

LGA pad	ConnectCore MP15 pad	ConnectCore MP15 signal name	STM32MP157 pad name	Alternate functions	Additional functions	Power group	Comments
				AF8: UART8_RTS/UART8_DE **AF10:** SAI2_MCLK_B **AF11:** SDMMC1_D123DIR **AF12:** FMC_AD11/FMC_D11 **AF13:** LCD_G0 **AF14:** LCD_CLK			
N20	LGA_N20	SPI4_MISO	PE13	**AF0:** HDP2 **AF1:** TIM1_CH3 **AF3:** DFSDM1_CKIN5 **AF5:** SPI4_MISO **AF10:** SAI2_FS_B **AF12:** FMC_AD10/FMC_D10 **AF13:** DCMI_D6 **AF14:** LCD_DE	-	VDD	
N21	LGA_N21	USART3_RTS	PG8	**AF0:** TRACED15 **AF1:** TIM2_CH1/TIM2_ETR **AF2:** ETH_CLK **AF3:** TIM8_ETR **AF5:** SPI6_NSS **AF6:** SAI4_D2 **AF7:** USART6_RTS/USART6_DE **AF8:** USART3_RTS/USART3_DE **AF9:** SPDIFRX_IN3 **AF10:** SAI4_FS_A **AF11:** ETH1_PPS_	-	VDD	

LGA pad	ConnectCore MP15 pad	ConnectCore MP15 signal name	STM32MP157 pad name	Alternate functions	Additional functions	Power group	Comments
				OUT **AF14:** LCD_G7			
P1	LGA_P1	NRST	NRST	-	-	VDD	Reset line of the module. Add an external 10K resistor to VDD.
P2	LGA_P2	3V3	-	-	-	3V3	Output power line.
P3	LGA_P3	GND	-	-	-	-	
P19	LGA_P19	UART7_RTS	PF8	**AF0:** TRACED12 **AF1:** TIM16_CH1N **AF5:** SPI5_MISO **AF6:** SAI1_SCK_B **AF7:** UART7_RTS/UART7_DE **AF9:** TIM13_CH1 **AF10:** QUADSPI_BK1_IO0	-	VDD	
P20	LGA_P20	UART7_CTS	PF9	**AF0:** TRACED13 **AF1:** TIM17_CH1N **AF5:** SPI5_MOSI **AF6:** SAI1_FS_B **AF7:** UART7_CTS **AF9:** TIM14_CH1 **AF10:** QUADSPI_BK1_IO1	-	VDD	
P21	LGA_P21	GND	-	-	-	-	
R1	LGA_R1	I2S2_WS	PI0	**AF2:** TIM5_CH4 **AF5:** SPI2_NSS/I2S2_WS	-	VDD	

LGA pad	ConnectCore MP15 pad	ConnectCore MP15 signal name	STM32MP157 pad name	Alternate functions	Additional functions	Power group	Comments
				AF13: DCMI_D13 **AF14:** LCD_G5			
R2	LGA_R2	DCMI_D7	PB9	**AF0:** HDP7 **AF1:** TIM17_CH1 **AF2:** TIM4_CH4 **AF3:** DFSDM1_DATIN7 **AF4:** I2C1_SDA **AF5:** SPI2_NSS/I2S2_WS **AF6:** I2C4_SDA **AF7:** SDMMC2_CDIR **AF8:** UART4_TX **AF9:** FDCAN1_TX **AF10:** SDMMC2_D5 **AF11:** SDMMC1_CDIR **AF12:** SDMMC1_D5 **AF13:** DCMI_D7 **AF14:** LCD_B7	-	VDD	
R3	LGA_R3	GND	-	-	-	-	
R19	LGA_R19	UART7_RX	PF6	**AF1:** TIM16_CH1 **AF5:** SPI5_NSS **AF6:** SAI1_SD_B **AF7:** UART7_RX **AF9:** QUADSPI_BK1_IO3 **AF12:** SAI4_SCK_B	-	VDD	
R20	LGA_R20	UART7_TX	PF7	**AF1:** TIM17_CH1 **AF5:** SPI5_SCK **AF6:** SAI1_MCLK_B **AF7:** UART7_TX	-	VDD	

LGA pad	ConnectCore MP15 pad	ConnectCore MP15 signal name	STM32MP157 pad name	Alternate functions	Additional functions	Power group	Comments
				AF9: QUADSPI_BK1_IO2			
R21	LGA_R21	USART3_RX	PB12	**AF1:** TIM1_BKIN **AF2:** I2C6_SMBA **AF4:** I2C2_SMBA **AF5:** SPI2_NSS/I2S2_WS **AF6:** DFSDM1_CKIN7 **AF7:** USART3_CK **AF8:** USART3_RX **AF9:** FDCAN2_RX **AF11:** ETH1_GMII_TXD0/ETH1_MII_TXD0/ETH1_RGMII_TXD0/ETH1_RMII_TXD0 **AF14:** UART5_RX	-	VDD	
T1	LGA_T1	I2S2_CK	PI1	**AF3:** TIM8_BKIN2 **AF5:** SPI2_SCK/I2S2_CK **AF13:** DCMI_D8 **AF14:** LCD_G6	-	VDD	
T2	LGA_T2	ANA0	ANA0	-	ADC1_INP0 ADC1_INN1 ADC2_INP0 ADC2_INN1	-	
T3	LGA_T3	ANA1	ANA1	-	ADC1_INP1 ADC2_INP1	-	
T19	LGA_T19	SDMMC1_D3	PC11	**AF0:** TRACED3 **AF3:** DFSDM1_	ANA0	VDD	

LGA pad	ConnectCore MP15 pad	ConnectCore MP15 signal name	STM32MP157 pad name	Alternate functions	Additional functions	Power group	Comments
				DATIN5 **AF6:** SPI3_MISO/I2S3_SDI **AF7:** USART3_RX **AF8:** UART4_RX **AF9:** QUADSPI_BK2_NCS **AF10:** SAI4_SCK_B **AF12:** SDMMC1_D3 **AF13:** DCMI_D4			
T20	LGA_T20	PF12	PF12	**AF0:** TRACED4 **AF11:** ETH1_GMII_RXD4 **AF12:** FMC_A6	ADC1_INP6 ADC1_INN2	VDD	
T21	LGA_T21	USART3_TX	PD8	**AF3:** DFSDM1_CKIN3 **AF6:** SAI3_SCK_B **AF7:** USART3_TX **AF9:** SPDIFRX_IN2 **AF12:** FMC_AD13/FMC_D13 **AF14:** LCD_B7	-	VDD	
U1	LGA_U1	SDMMC2_D1	PB15	**AF0:** RTC_REFIN **AF1:** TIM1_CH3N **AF2:** TIM12_CH2 **AF3:** TIM8_CH3N **AF4:** USART1_RX **AF5:** SPI2_MOSI/I2S2_SDO **AF6:** DFSDM1_CKIN2 **AF9:** SDMMC2_D1	-	VDD	
U2	LGA_U2	PF13	PF13	**AF0:** TRACED5	ADC2_INP2	VDD	

LGA pad	ConnectCore MP15 pad	ConnectCore MP15 signal name	STM32MP157 pad name	Alternate functions	Additional functions	Power group	Comments
				AF3: DFSDM1_DATIN6 **AF4:** I2C4_SMBA **AF5:** I2C1_SMBA **AF6:** DFSDM1_DATIN3 **AF11:** ETH1_GMII_RXD5 **AF12:** FMC_A7			
U3	LGA_U3	PF14	PF14	**AF0:** TRACED6 **AF3:** DFSDM1_CKIN6 **AF4:** I2C4_SCL **AF5:** I2C1_SCL **AF11:** ETH1_GMII_RXD6 **AF12:** FMC_A8	ADC2_INP6 ADC2_INN2	VDD	
U19	LGA_U19	PB6	PB6	**AF1:** TIM16_CH1N **AF2:** TIM4_CH1 **AF4:** I2C1_SCL **AF5:** CEC **AF6:** I2C4_SCL **AF7:** USART1_TX **AF9:** FDCAN2_TX **AF10:** QUADSPI_BK1_NCS **AF11:** DFSDM1_DATIN5 **AF12:** UART5_TX **AF13:** DCMI_D5	-	VDD	
U20	LGA_U20	LTDC_R3	PB0	**AF1:** TIM1_CH2N **AF2:** TIM3_CH3 **AF3:** TIM8_CH2N	ADC1_INP9 ADC1_INN5 ADC2_INP9	VDD	

LGA pad	ConnectCore MP15 pad	ConnectCore MP15 signal name	STM32MP157 pad name	Alternate functions	Additional functions	Power group	Comments
				AF6: DFSDM1_CKOUT **AF8:** UART4_CTS **AF9:** LCD_R3 **AF11:** ETH1_GMII_RXD2/ETH1_MII_RXD2/ETH1_RGMII_RXD2 **AF12:** MDIOS_MDIO **AF14:** LCD_G1	ADC2_INN5		
U21	LGA_U21	JTRST	JTRST	-	-	-	
V1	LGA_V1	SDMMC2_CMD	PG6	**AF0:** TRACED14 **AF1:** TIM17_BKIN **AF10:** SDMMC2_CMD **AF13:** DCMI_D12 **AF14:** LCD_R7	-	VDD	
V2	LGA_V2	GND	-	-	-	-	
V3	LGA_V3	BOOT0	BOOT0	-	-	VDD	10K pull-up resistor.
V4	LGA_V4	GND	-	-	-	-	
V5	LGA_V5	SDMMC1_D0	PC8	**AF0:** TRACED0 **AF2:** TIM3_CH3 **AF3:** TIM8_CH3 **AF6:** UART4_TX **AF7:** USART6_CK **AF8:** UART5_RTS/UART5_DE **AF12:** SDMMC1_D0 **AF13:** DCMI_D2	-	VDD	

LGA pad	ConnectCore MP15 pad	ConnectCore MP15 signal name	STM32MP157 pad name	Alternate functions	Additional functions	Power group	Comments
V6	LGA_V6	GND	-	-	-	-	
V7	LGA_V7	LTDC_G6	PI11	**AF0:** MCO1 **AF5:** I2S_CKIN **AF9:** LCD_G6	WKUP5	VDD	
V8	LGA_V8	LTDC_R2	PH8	**AF2:** TIM5_ETR **AF4:** I2C3_SDA **AF13:** DCMI_HSYNC **AF14:** LCD_R2	-	VDD	
V9	LGA_V9	LTDC_R5	PC0	**AF3:** DFSDM1_CKIN0 **AF4:** LPTIM2_IN2 **AF6:** DFSDM1_DATIN4 **AF8:** SAI2_FS_B **AF10:** QUADSPI_BK2_NCS **AF14:** LCD_R5	ADC1_INP10 ADC2_INP10	VDD	
V10	LGA_V10	LTDC_R0	PH2	**AF1:** LPTIM1_IN2 **AF9:** QUADSPI_BK2_IO0 **AF10:** SAI2_SCK_B **AF11:** ETH1_GMII_CRS/ETH1_MII_CRS **AF14:** LCD_R0	-	VDD	
V11	LGA_V11	GND	-	-	-	-	
V12	LGA_V12	SPI4_SCK	PE12	**AF1:** TIM1_CH3N **AF3:** DFSDM1_DATIN5 **AF5:** SPI4_SCK **AF8:** SDMMC1_D0DIR **AF10:** SAI2_SCK_B	-	VDD	

LGA pad	ConnectCore MP15 pad	ConnectCore MP15 signal name	STM32MP157 pad name	Alternate functions	Additional functions	Power group	Comments
				AF12: FMC_AD9/DMC_D9 **AF14:** LCD_B4			
V13	LGA_V13	LTDC_G7	PB5	**AF0:** ETH_CLK **AF1:** TIM17_BKIN **AF2:** TIM3_CH2 **AF3:** SAI4_D1 **AF4:** I2C1_SMBA **AF5:** SPI1_MOSI/I2S1_SDO **AF6:** I2C4_SMBA **AF7:** SPI3_MOSI/I2S3_SDO **AF8:** SPI6_MOSI **AF9:** FDCAN2_RX **AF10:** SAI4_SD_A **AF11:** ETH1_PPS_OUT **AF12:** UART5_RX **AF13:** DCMI_D10 **AF14:** LCD_G7	-	VDD	
V14	LGA_V14	SDMMC1_D1	PC9	**AF0:** TRACED1 **AF2:** TIM3_CH4 **AF3:** TIM8_CH4 **AF4:** I2C3_SDA **AF5:** I2S_CIN **AF8:** UART5_CTS **AF9:** QUADSPI_BK1_IO0 **AF12:** SDMMC1_D1 **AF13:** DCMI_D3 **AF14:** LCD_B2	-	VDD	

LGA pad	ConnectCore MP15 pad	ConnectCore MP15 signal name	STM32MP157 pad name	Alternate functions	Additional functions	Power group	Comments
V15	LGA_V15	SDMMC1_D2	PC10	**AF0:** TRACED2 **AF3:** DFSDM1_CKIN5 **AF6:** SPI3_SCK/I2S3_CK **AF7:** USART3_TX **AF8:** UART4_TX **AF9:** QUADSPI_BK1_IO1 **AF10:** SAI4_MCLK_B **AF12:** SDMMC1_D2 **AF13:** DCMI_D8 **AF14:** LCD_R2	-	VDD	
V16	LGA_V16	GND	-	-	-	-	
V17	LGA_V17	ETH1_CLK125	PG5	**AF1:** TIM1_ETR **AF11:** ETH1_GMII_CLK125/ETH1_RGMII_CLK125 **AF12:** FMC_A15	-	VDD	
V18	LGA_V18	ETH1_GTX_CLK	PG4	**AF1:** TIM1_BKIN2 **AF11:** ETH1_GMII_GTX_CLK/ETH1_RGMII_GTX_CLK **AF12:** FMC_A14	-	VDD	
V19	LGA_V19	PC3	PC3	**AF0:** TRACECLK **AF3:** DFSDM1_DATIN1 **AF5:** SPI2_MOSI/I2S2_SDO **AF11:** ETH1_GMII_TX_CLK/ETH1_MII_TX_CLK	ADC1_INP13 ADC1_INN12	VDD	

LGA pad	ConnectCore MP15 pad	ConnectCore MP15 signal name	STM32MP157 pad name	Alternate functions	Additional functions	Power group	Comments
V20	LGA_V20	PG1	PG1	**AF0:** TRACED1 **AF11:** ETH1_GMII_TXD5 **AF12:** FMC_A11	-	VDD	
V21	LGA_V21	JTDI	JTDI	-	-	-	
W1	LGA_W1	PA13	PA13	**AF0:** DBTRGO **AF1:** DBTRGI **AF2:** MCO1 **AF8:** UART4_TX	BOOTFAILN	VDD	
W2	LGA_W2	SDMMC2_D4	PA8	**AF0:** MCO1 **AF1:** TIM1_CH1 **AF3:** TIM8_BKIN2 **AF4:** I2C3_SCL **AF5:** SPI3_MOSI/I2S3_SDO **AF7:** USART1_CK **AF8:** SDMMC2_CKIN **AF9:** SDMMC2_D4 **AF10:** OTG_FS_SOF/OTG_HS_SOF **AF12:** SAI4_SD_B **AF13:** UART7_RX **AF14:** LCD_R6	-	VDD	
W3	LGA_W3	SDMMC2_D6	PE5	**AF0:** TRACED3 **AF2:** SAI1_CK2 **AF3:** DFSDM1_CKIN3 **AF4:** TIM15_CH1 **AF5:** SPI4_MISO **AF6:** SAI1_SCK_A **AF7:** SDMMC2_D0DIR **AF8:** SDMMC1_D0DIR	-	VDD	

LGA pad	ConnectCore MP15 pad	ConnectCore MP15 signal name	STM32MP157 pad name	Alternate functions	Additional functions	Power group	Comments
				AF9: SDMMC2_D6 **AF11:** SDMMC1_D6 **AF12:** FMC_A21 **AF13:** DCMI_D6 **AF14:** LCD_G0			
W4	LGA_W4	PA4	PA4	**AF0:** HDP0 **AF2:** TIM5_ETR **AF4:** SAI4_D2 **AF5:** SPI1_NSS/I2S1_WS **AF6:** SPI3_NSS/I2S3_WS **AF7:** USART2_CK **AF8:** SPI6_NSS **AF12:** SAI4_FS_A **AF13:** DCMI_HSYNC **AF14:** LCD_VSYNC	ADC1_INP18 ADC2_INP18 DAC_OUT1	VDD	
W5	LGA_W5	SDMMC2_D7	PC7	**AF0:** HDP4 **AF2:** TIM3_CH2 **AF3:** TIM8_CH2 **AF4:** DFSDMI_DATIN3 **AF6:** I2S3_MCK **AF7:** USART6_RX **AF8:** SDMMC1_D123DIR **AF9:** SDMMC2_D123DIR **AF10:** SDMMC2_D7 **AF12:** SDMMC1_D7 **AF13:** DCMI_D1 **AF14:** LCD_G6	-	VDD	

LGA pad	ConnectCore MP15 pad	ConnectCore MP15 signal name	STM32MP157 pad name	Alternate functions	Additional functions	Power group	Comments
W6	LGA_W6	GND	-	-	-	-	
W7	LGA_W7	NC	-	-	-	-	
W8	LGA_W8	PMIC_ PONKEY_N	-	-	-	VDD	Power ON key of the module. No external pull-up resistor is required.
W9	LGA_W9	PA15	PA15	**AF0:** DBTRGI **AF1:** TIM2_CH1/TIM2_ ETR **AF2:** SAI4_D2 **AF3:** SDMMC1_CDIR **AF4:** CEC **AF5:** SPI1_NSS/I2S1_ WS **AF6:** SPI3_NSS/I2S3_ WS **AF7:** SPI6_NSS **AF8:** UART4_ RTS/UART4_DE **AF9:** SDMMC2_D5 **AF10:** SDMMC2_CDIR **AF11:** SDMMC1_D5 **AF12:** SAI4_FS_A **AF13:** UART7_TX **AF14:** LCD_R1	-	VDD	
W10	LGA_W10	LTDC_R6	PH12	**AF0:** HDP2 **AF2:** TIM5_CH3 **AF4:** I2C4_SDA **AF5:** I2C1_SDA **AF13:** DCMI_D3 **AF14:** LCD_R6	-	VDD	

LGA pad	ConnectCore MP15 pad	ConnectCore MP15 signal name	STM32MP157 pad name	Alternate functions	Additional functions	Power group	Comments
W11	LGA_W11	GND	-	-	-	-	
W12	LGA_W12	GND	-	-	-	-	
W13	LGA_W13	SDMMC1_CMD	PD2	**AF2:** TIM3_ETR **AF4:** I2C5_SMBA **AF6:** UART4_RX **AF8:** UART5_RX **AF12:** SDMMC1_CMD **AF13:** DCMI_D11	-	VDD	
W14	LGA_W14	PWR_ON	PWR_ON	-	PWR_ONLP	-	CPU core supply enable output. Internally connected to the PMIC. Leave this pin unconnected unless otherwise noted.
W15	LGA_W15	SDMMC1_CLK	PC12	**AF0:** TRACECLK **AF1:** MCO2 **AF2:** SAI4_D3 **AF6:** SPI3_MOSI/I2S3_SDO **AF7:** USART3_CK **AF8:** UART5_TX **AF10:** SAI4_SD_B **AF12:** SDMMC1_CK **AF13:** DCMI_D9	-	VDD	
W16	LGA_W16	GND	-	-	-	-	
W17	LGA_W17	ETH1_RXD2	PH6	**AF2:** TIM12_CH1 **AF4:** I2C2_SMBA	-	VDD	

LGA pad	ConnectCore MP15 pad	ConnectCore MP15 signal name	STM32MP157 pad name	Alternate functions	Additional functions	Power group	Comments
				AF5: SPI5_SCK **AF11:** ETH1_GMII_RXD2/ETH1_MII_RXD2/ETH1_RGMII_RXD2 **AF12:** MDIOS_MDIO **AF13:** DCMI_D8			
W18	LGA_W18	ETH1_TXD2	PC2	**AF3:** DFSDM1_CKIN1 **AF5:** SPI2_MISO/I2S2_SDI **AF6:** DFSDM1_CKOUT **AF11:** ETH1_GMII_TXD2/ETH1_MII_TXD2/ETH1_RGMII_TXD2 **AF13:** DCMI_PIXCLK	ADC1_INP12 ADC1_INN11	VDD	
W19	LGA_W19	ETH1_RXD3	PH7	**AF4:** I2C3_SCL **AF5:** SPI5_MISO **AF11:** ETH1_GMII_RXD3/ETH1_MII_RXD3/ETH1_RGMII_RXD3 **AF12:** MDIOS_MDC **AF13:** DCMI_D9	-	VDD	
W20	LGA_W20	ETH1_TXD3	PE2	**AF0:** TRACECLK **AF2:** SAI1_CK1 **AF4:** I2C4_SCL **AF5:** SPI4_SCK **AF6:** SAI1_MCLK_A **AF9:** QUADSPI_BK1_IO2	-	VDD	

LGA pad	ConnectCore MP15 pad	ConnectCore MP15 signal name	STM32MP157 pad name	Alternate functions	Additional functions	Power group	Comments
				AF11: ETH1_GMII_TXD3/ETH1_MII_TXD3/ETH1_RGMII_TXD3 **AF12:** FMC_A23			
W21	LGA_W21	JTCK-SWCLK	JTCK-SWCLK	-	-	-	
Y1	LGA_Y1	BOOT1	BOOT1	-	-	VDD	10K pull-up resistor.
Y2	LGA_Y2	SDMMC2_D5	PA9	**AF1:** TIM1_CH2 **AF4:** I2C3_SMBA **AF5:** SPI2_SCK/I2S2_CK **AF7:** USART1_TX **AF8:** SDMMC2_CDIR **AF10:** SDMMC2_D5 **AF13:** DCMI_D0 **AF14:** LCD_R5	-	VDD	
Y3	LGA_Y3	LTDC_B1	PG12	**AF1:** LPTIM1_IN1 **AF5:** SPI6_MISO **AF6:** SAI4_CK2 **AF7:** USART6_RTS/USART6_DE **AF8:** SPDIFRX_IN2 **AF9:** LCD_B4 **AF10:** SAI4_SCK_A **AF11:** ETH1_PHY_INTN **AF12:** FMC_NE4 **AF14:** LCD_B1	-	VDD	
Y4	LGA_Y4	I2S2_MCK	PC6	**AF0:** HDP1	-	VDD	

LGA pad	ConnectCore MP15 pad	ConnectCore MP15 signal name	STM32MP157 pad name	Alternate functions	Additional functions	Power group	Comments
				AF2: TIM3_CH1 **AF3:** TIM8_CH1 **AF4:** DFSDM1_CKIN3 **AF5:** I2S2_MCK **AF7:** USART6_TX **AF8:** SDMMC1_D0DIR **AF9:** SDMMC2_D0DIR **AF10:** SDMMC2_D6 **AF11:** DSI_TE **AF12:** SDMMC1_D6 **AF13:** DCMI_D0 **AF14:** LCD_HSYNC			
Y5	LGA_Y5	LTDC_G0	PB1	**AF1:** TIM1_CH3N **AF2:** TIM3_CH4 **AF3:** TIM8_CH3N **AF6:** DFSDM1_DATIN1 **AF9:** LCD_R6 **AF11:** ETH1_GMII_RXD3/ETH1_MII_RXD3/ETH1_RGMII_RXD3 **AF12:** MDIOS_MDC **AF14:** LCD_G0	ADC1_INP5 ADC2_INP5	VDD	
Y6	LGA_Y6	LTDC_G1	PE6	**AF0:** TRACED2 **AF1:** TIM1_BKIN2 **AF2:** SAI1_D1 **AF4:** TIM15_CH2 **AF5:** SPI4_MOSI **AF6:** SAI1_SD_A **AF7:** SDMMC2_D0 **AF8:** SDMMC1_D2 **AF10:** SAI2_MCLK_B	-	VDD	

LGA pad	ConnectCore MP15 pad	ConnectCore MP15 signal name	STM32MP157 pad name	Alternate functions	Additional functions	Power group	Comments
				AF12: FMC_A22 **AF13:** DCMI_D7 **AF14:** LCD_G1			
Y7	LGA_Y7	I2C2_SCL	PH4	**AF4:** I2C2_SCL **AF9:** LCD_G5 **AF14:** LCD_G4	-	VDD	2.2K pull-up on module connected to VDD.
Y8	LGA_Y8	I2C2_SDA	PH5	**AF4:** I2C2_SDA **AF5:** SPI5_NSS **AF12:** SAI4_SD_B	-	VDD	2.2K pull-up on module connected to VDD.
Y9	LGA_Y9	SPI4_NSS	PE11	**AF1:** TIM1_CH2 **AF3:** DFSDM1_CKIN4 **AF5:** SPI4_NSS **AF7:** USART6_CK **AF10:** SAI2_SD_B **AF12:** FMC_AD8/FMC_D8 **AF13:** DCMI_D4 **AF14:** LCD_G3	-	VDD	
Y10	LGA_Y10	GND	-	-	-	-	
Y11	LGA_Y11	VBUS_OTG	-	-	-	-	Output power line.
Y12	LGA_Y12	LTDC_R4	PA5	**AF1:** TIM2_CH1/TIM2_ETR **AF3:** TIM8_CH1N **AF4:** SAI4_CK1 **AF5:** SPI1_SCK/I2S1_CK **AF8:** SPI6_SCK **AF12:** SAI4_MCLK_A **AF14:** LCD_R4	ADC1_INP19 ADC1_INN18 ADC2_INP19 ADC2_INN18 DAC_OUT2	VDD	

LGA pad	ConnectCore MP15 pad	ConnectCore MP15 signal name	STM32MP157 pad name	Alternate functions	Additional functions	Power group	Comments
Y13	LGA_Y13	I2C6_SCL	PZ0	**AF2:** I2C6_SCL **AF3:** I2C2_SCL **AF5:** SPI1_SCK/I2S1_CK **AF7:** USART1_CK **AF8:** SPI6_SCK	-	VDD	
Y14	LGA_Y14	I2C6_SDA	PZ3	**AF2:** I2C6_SDA **AF3:** I2C2_SDA **AF4:** I2C5_SDA **AF5:** SPI1_NSS/I2S1_WS **AF6:** I2C4_SDA **AF7:** USART1_CTS/USART1_NSS **AF8:** SPI6_NSS	-	VDD	
Y15	LGA_Y15	VBUS_SW	-	-	-	-	Output power line.
Y16	LGA_Y16	VBUS_SW	-	-	-	-	Output power line.
Y17	LGA_Y17	LTDC_R1	PH3	**AF3:** DFSDM1_CKIN4 **AF9:** QUADSPI_BK2_IO1 **AF10:** SAI2_MCLK_B **AF11:** ETH1_GMII_COL/ETH1_MII_COL **AF14:** LCD_R1	-	VDD	
Y18	LGA_Y18	NC	-	-	-	-	
Y19	LGA_Y19	PA14	PA14	**AF0:** DBTRGO **AF1:** DBTRGI **AF2:** MCO2	-	VDD	
Y20	LGA_Y20	LTDC_R7	PE15	**AF0:** HDP3	-	VDD	

LGA pad	ConnectCore MP15 pad	ConnectCore MP15 signal name	STM32MP157 pad name	Alternate functions	Additional functions	Power group	Comments
				AF1: TIM1_BKIN **AF4:** TIM15_BKIN **AF7:** USART2_CTS/USART2_NSS **AF8:** UART8_CTS **AF10:** FMC_NCE2 **AF12:** FMC_AD12/FMC_D12 **AF14:** LCD_R7			
Y21	LGA_Y21	JTDO-TRACESWO	JTDO-TRACESWO	-	-	-	
AA1	LGA_AA1	GND	-	-	-	-	
AA2	LGA_AA2	SDMMC2_D0	PB14	**AF1:** TIM1_CH2N **AF2:** TIM12_CH1 **AF3:** TIM8_CH2N **AF4:** USART1_TX **AF5:** SPI2_MISO/I2S2_SDI **AF6:** DFSDM1_DATIN2 **AF7:** USART3_RTS/USART3_DE **AF9:** SDMMC2_D0	-	VDD	
AA3	LGA_AA3	SDMMC2_CLK	PE3	**AF0:** TRACED0 **AF4:** TIM15_BKIN **AF6:** SAI1_SD_B **AF9:** SDMMC2_CK **AF12:** FMC_A19	-	VDD	
AA4	LGA_AA4	SDMMC2_D2	PB3	**AF0:** TRACED9 **AF1:** TIM2_CH2	-	VDD	

LGA pad	ConnectCore MP15 pad	ConnectCore MP15 signal name	STM32MP157 pad name	Alternate functions	Additional functions	Power group	Comments
				AF4: SAI4_CK1 **AF5:** SPI1_SCK/I2S1_CK **AF6:** SPI3_SCK/I2S3_CK **AF8:** SPI6_SCK **AF9:** SDMMC2_D2 **AF12:** SAI4_MCLK_A **AF13:** UART7_RX			
AA5	LGA_AA5	SDMMC2_D3	PB4	**AF0:** TRACED8 **AF1:** TIM16_BKIN **AF2:** TIM3_CH1 **AF4:** SAI4_CK2 **AF5:** SPI1_MISO/I2S1_SDI **AF6:** SPI3_MISO/I2S3_SDI **AF7:** SPI2_NSS/I2S2_WS **AF8:** SPI6_MISO **AF9:** SDMMC2_D3 **AF12:** SAI4_SCK_A **AF13:** UART7_TX	-	VDD	
AA6	LGA_AA6	UART4_TX	PG11	**AF0:** TRACED11 **AF4:** USART1_TX **AF6:** UART4_TX **AF8:** SPDIFRX_IN1 **AF11:** ETH1_GMII_TX_EN/ETH1_MII_TX_EN/ETH1_RGMII_TX_CTL/ETH1_RMII_TX_EN	-	VDD	

LGA pad	ConnectCore MP15 pad	ConnectCore MP15 signal name	STM32MP157 pad name	Alternate functions	Additional functions	Power group	Comments
				AF13: DCMI_D3 **AF14:** LCD_B3			
AA7	LGA_AA7	UART4_RX	PB2	**AF0:** TRACED4 **AF1:** RTC_OUT2 **AF2:** SAI1_D1 **AF3:** DFSDM1_CKIN1 **AF4:** USART1_RX **AF5:** I2S_CKIN **AF6:** SAI1_SD_A **AF7:** SPI3_MOSI/I2S3_SDO **AF8:** UART4_RX **AF9:** QUADSPI_CLK	-	VDD	
AA8	LGA_AA8	USB2_D_P	USB_DP2	-	USBH_HS_DP2 OTG_HS_DP	-	
AA9	LGA_AA9	USB2_D_N	USB_DM2	-	USBH_HS_DM2 OTG_HS_DM	-	
AA10	LGA_AA10	GND	-	-	-	-	
AA11	LGA_AA11	OTG_VBUS	OTG_VBUS	-	OTG_FS_VBUS OTG_HS_VBUS	-	Input power line.
AA12	LGA_AA12	I2S2_SDI	PI2	**AF3:** TIM8_CH4 **AF5:** SPI2_MISO/I2S2_SDI **AF13:** DCMI_D9 **AF14:** LCD_G7	-	VDD	

LGA pad	ConnectCore MP15 pad	ConnectCore MP15 signal name	STM32MP157 pad name	Alternate functions	Additional functions	Power group	Comments
AA13	LGA_AA13	USB_OTG_ID	PA10	**AF1:** TIM1_CH3 **AF5:** SPI3_NSS/I2S3_WS **AF7:** USART1_RX **AF11:** MDIOS_MDIO **AF12:** SAI4_FS_B **AF13:** DCMI_D1 **AF14:** LCD_B1	OTG_FS_ID OTG_HS_ID	-	
AA14	LGA_AA14	I2S2_SDO	PI3	**AF3:** TIM8_ETR **AF5:** SPI2_MOSI/I2S2_SDO **AF13:** DCMI_D10	-	VDD	
AA15	LGA_AA15	BOOT2	BOOT2	-	-	-	
AA16	LGA_AA16	JTMS-SWDIO	JTMS-SWDIO	-	-	-	
AA17	LGA_AA17	USB1_D_P	USB_DP1	-	USBH_HS_DP1	-	
AA18	LGA_AA18	USB1_D_N	USB_DM1	-	USBH_HS_DM1	-	
AA19	LGA_AA19	ETH1_MDC	PC1	**AF0:** TRACED0 **AF2:** SAI1_D1 **AF3:** DFSDM1_DATIN0 **AF4:** DFSDM1_CKIN4 **AF5:** SPI2_MOSI/I2S2_SDO **AF6:** SAI1_SD_A **AF9:** SDMMC2_CK **AF11:** ETH1_MDC **AF12:** MDIOS_MDC	ADC1_INP11 ADC1_INN10 ADC2_INP11 ADC2_INN10 TAMP_IN3 WKUP6	VDD	

LGA pad	ConnectCore MP15 pad	ConnectCore MP15 signal name	STM32MP157 pad name	Alternate functions	Additional functions	Power group	Comments
AA20	LGA_AA20	ETH1_MDIO	PA2	**AF1:** TIM2_CH3 **AF2:** TIM5_CH3 **AF3:** LPTIM4_OUT **AF4:** TIM15_CH1 **AF7:** USART2_TX **AF8:** SAI2_SCK_B **AF10:** SDMMC2_D0DIR **AF11:** ETH1_MDIO **AF12:** MDIOS_MDIO **AF14:** LCD_R1	ADC1_INP14 WKUP2	VDD	
AA21	LGA_AA21	GND	-	-	-	-	

Module specifications

The following sections describe the specifications for the ConnectCore MP15 SOM.

Power consumption 85
Mechanical specifications 86
Environmental specifications 88
Socket options 89

Power consumption

This section contains information about the power consumption of the ConnectCore MP15 system-on-module. All presented results, unless otherwise noted, were measured with ConnectCore MP15 variant -01 on a ConnectCore MP1 DVK at ambient temperature (25ºC).

The power consumption in the ConnectCore MP1 DVK is calculated as follows:

Module Power consumption (W) = I_{R326}*5V - I_{R1}*3.3V - I_{R4}*3.3V

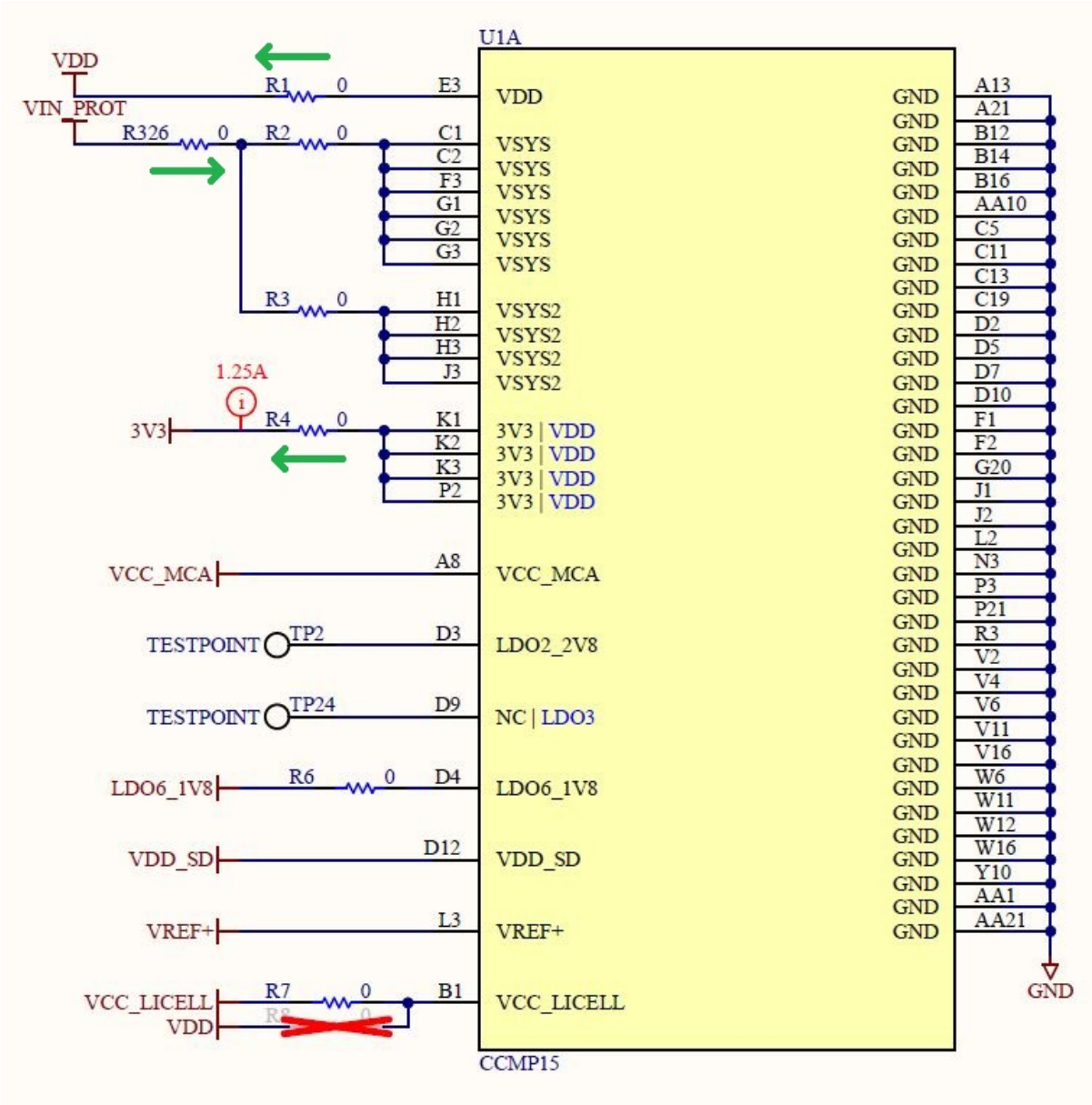

Note These power consumption numbers should be considered guidelines only, never as fixed or absolute values. Actual values will depend entirely upon individual setup and system application.

Power consumption use cases

The power consumption of the ConnectCore MP15 system-on-module was evaluated in the following use cases:

Standby

In this mode, the system suspends to RAM and operation can be resumed without performing a new boot cycle. RAM memory is in self-refresh.

Note that in order to achieve the deepest standby power mode it is necessary to disable all wake-up sources except the internal RTC.

System IDLE

In this use case, the system is running Digi Embedded Yocto.

RTC

System on RTC (Real-time clock) mode keeping time of the system, powered from a coin cell with no other power supply attached.

Results

Use case	Power consumption
Standby	26.2 mW
IDLE	1.038 W
RTC	13.5 uW

Mechanical specifications

This section provides mechanical dimensions and host PCB footprint guidance for the Digi SMTplus® form factor of the ConnectCore MP15 module.

Host PCB footprint and cutout

Host PCBs must have a cutout to accommodate the components on the bottom side of the module:

- Cutout tolerances: +/- 0.15 mm
- Corner radius: 0.5 mm

Digi SMTplus® LGA mounting

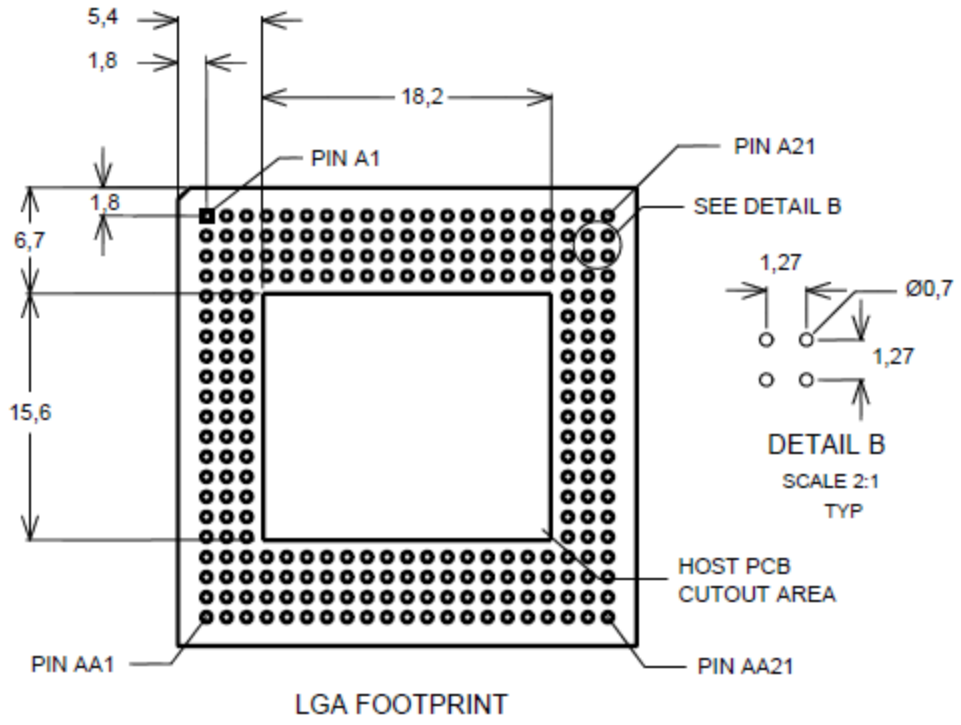

Digi SMTplus® Castellated Edge Via mounting

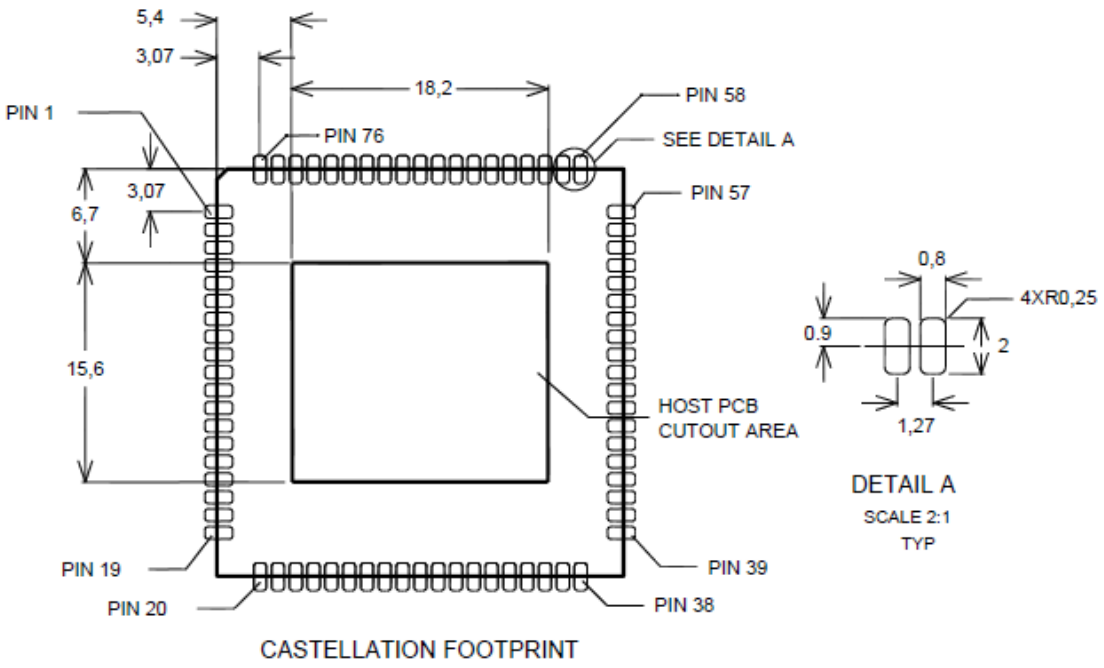

Label

The MAC address and serial number of the SOM are encoded in the data matrix on the SOM label.

Weight

The weight of the ConnectCore MP15 module (with Wi-Fi/Bluetooth networking and shield) is 6.60 g.

The weight of the non-wireless ConnectCore MP15 module variant is 6.35 g.

Note See the ConnectCore MP15 product page for mechanical design documents, drawings, and other resources.

Environmental specifications

Operating temperature: -40 to 85 C.

CAUTION! Your final product may require additional thermal management such as passive (heatsink/spreader) or active (airflow) cooling to achieve the maximum operating temperature without exceeding the processor junction temp limit.

Socket options

For testing, prototyping, and other primarily development-related purposes, Digi International and E-tec Interconnect AG have developed sockets allowing the easy insertion and removal of modules in a carrier board design.

All drawings, user instructions, schematics and PCB footprints are posted on the ConnectCore MP15 technical support website.

Note The ConnectCore MP1 Development Board (Digi P/N CC-WMP157-KIT) has been designed to support a RF-LPF246-129M-21AAEW55L-CCMP1 socket, and can be used as a reference design.

All sockets are sold and built by E-tec Interconnect AG. The table below provides an overview of the available part numbers.

Socket model	E-tec part number
ConnectCore MP15	RF-LPF246-129M-21AAEW55L-CCMP1

Note Please direct all socket-related purchase inquiries to E-tec Interconnect AG (info@e-tec.com).

Assembly instructions

Moisture sensitivity and shelf life 91
Mounting 91
Coplanarity 91
Solder paste print 91
Stencil 91
SMT pick and place 92
SMT process parameter reference - castellation and LGA applications 92
Reflow oven profile 92
Conformal coating 94

Moisture sensitivity and shelf life

The ConnectCore MP15is classified as a Level 3 Moisture Sensitive Device in accordance with IPC/JEDEC J-STD-020.

1. Calculated shelf life in sealed packaging: 12 months at <40°C and <90% relative humidity (RH).
2. Environmental condition during production: 30°C / 60% RH according to IPC/JEDEC J-STD-033C paragraph 5.
3. After module is removed from sealed packaging, modules that will be subjected to reflow solder temperatures are required to be:
   a. Mounted within 168 hours.
   b. Stored per J-STD-033.
4. Baking is required, before mounting if:
   a. the packaging humidity indicator indicates 10% RH or higher.
   b. either 3a or 3b are not met.
5. If baking is required, bake modules in trays for 4-6 hours at 125°C; maximum stacking height is 10 trays.

Mounting

The ConnectCore MP15 has been designed with easy integration into existing SMT processes in mind. This section contains guidance for mounting the module on your carrier board.

The module can be configured and mounted in a Castellation OR Land Grid Array (LGA) form.

Modules are not sealed and therefore they should not be subjected to a wash cycle or similar treatment where condensation could occur.

Coplanarity

The coplanarity measured is <0.003" bow and twist (98% confidence interval). It is important that the carrier board is also coplanar. It is recommended that the assembly be supported during the reflow process with a fixture to minimize the potential bow of the carrier card.

Solder paste print

The following solder paste type has been approved for mounting the module on a carrier board:

- SAC305 No-Clean solder paste

The following solder paste printing parameters are recommended:

- Stencil thickness: 0.100 mm / 4 mil

Stencil

For both castellation AND LGA applications, Digi recommends a laser cut stencil. Based on the actual coplanarity characteristics of your carrier board, adjustments may be required to determine the optimal solder paste volume.

SMT pick and place

- Placement nozzle: Largest available on the machine.
- Placement Speed: Slowest speed for the machine.
- Placement alignment: 10% of pad diameter (compensating for module weight and supporting alignment). The module should be placed last as part of the assembly/mounting process to eliminate unexpected shifting.

SMT process parameter reference - castellation and LGA applications

Process	SMT process	Specification recommendations
Screen Print	Solder paste	SAC 305 No-Clean
	Stencil thickness	0.100mm / 4mil
PnP	Placement nozzle	Largest available on machine
	Speed	Slowest possible with PnP machine
	Placement sequence	Last, if possible
	Placement alignment	10% maximum off center of pad
Reflow	See Reflow oven profile.	

Reflow oven profile

- Keep SoM below 238°C during the reflow cycle for castellation AND LGA applications.
- Time Above Liquidous (TAL) is recommended to be between 50 to 70 seconds.
- Use of 40AWG K-type thermocouple and M.O.L.E or equivalent thermal profiler is recommended.

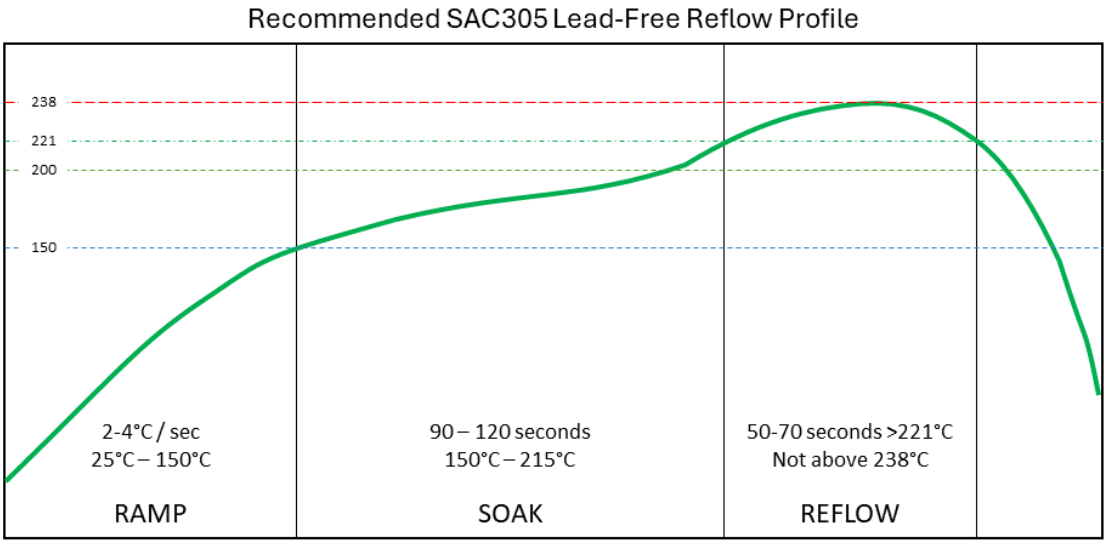

Recommended reflow profile only - 10 heating zone convection reflow oven
Modifications to profile may be required to fit specific equipment, application, process or design

Two thermocouple locations are recommended to achieve proper attachment of SOM:

- For castellation applications, one thermocouple located on a castellation (preferable a power or ground castellation) and a second located near the underside center of the SOM to ensure SOM is not exposed to excessive temperatures.
- For LGA applications, one thermocouple located on the outer-most row (preferable a power or ground pad) and a second located near the underside center of the SOM to ensure SOM is not exposed to excessive temperatures.

Note Digi recommends X-ray analysis after reflow to confirm proper mounting and solder reflow.

The ConnectCore MP15 is approved to withstand a total of four (4) reflow cycles. Two (2) reflow cycles are required for manufacturing the ConnectCore MP15. Two (2) reflow cycles are remaining for mounting the module on the carrier board. Digi strongly recommends soldering the ConnectCore MP15 during the last reflow cycles of the carrier board manufacturing process.

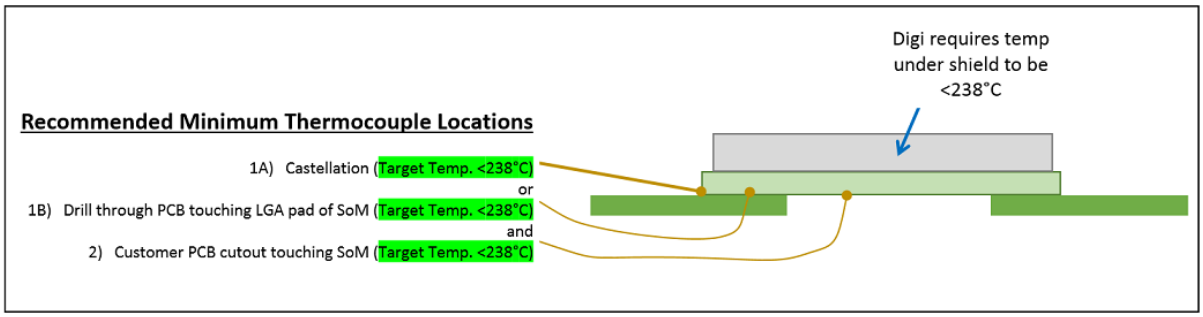

Conformal coating

ConnectCore MP15 variants without thermal putty may be conformally coated using an IPC-CC-830 compliant Acrylic (Type AR) coating material. The material shall be applied by spray application per IPC-A-610. DIP coating method shall not be used. If other coating material is required Urethane (Type UR), Silicone (Type SR) or Epoxy (Type ER) please contact Digi.

Regulatory information and certifications

Note The ConnectCore MP15 module complies with Part 15 of the United States FCC rules and regulations.

United States FCC 96
Europe and UK 101
Canada (IC) 104
Japan 105

United States FCC

The ConnectCore MP15 module complies with Part 15 of the FCC rules and regulations. Compliance with the labeling requirements, FCC notices and antenna usage guidelines is required. To fulfill FCC Certification, the OEM must comply with the following regulations:

The system integrator must ensure that the text on top side of the module is placed on the outside of the final product.

The ConnectCore MP15 module may only be used with approved antennas. (See FCC-approved antennas.)

Labeling requirements

WARNING! The Original Equipment Manufacturer (OEM) must ensure that FCC labeling requirements are met. This includes a clearly visible label on the outside of the final product enclosure that displays the contents shown below. Required FCC Label for OEM products containing the ConnectCore MP15 module.

Contains FCC ID: MCQ-CCMP1

This device complies with part 15 of the FCC Rules. Operation is subject to the following two conditions: (1) This device may not cause harmful interference, and (2) this device must accept any interference received, including interference that may cause undesired operation.

Maximum power and frequency specifications (FCC)

RF band	Peak antenna gain	Technology	Channel bandwidth	Channel number (Center frequency, MHz)
2.4 GHz	2.5 dBi	BT + EDR Bluetooth LE	1	79 non-overlapping channels: 0 (2400) to 78 (2480)
			2	40 non-overlapping channels: 0 (2402) to 39 (2480)
		WLAN	20	1(2412), 2(2417), 3(2422), 4(2427), 5(2432), 6(2437), 7(2442), 8(2447), 9 (2452), 10 (2457), 11(2462)
			40	3(2422), 4(2427), 5(2432), 6(2437), 7(2442), 8(2447), 9(2452)
5 GHz	4.6 dBi	WLAN	20	36(5180), 40(5200), 44(5220), 48(5240), 52 (5260), 56(5280), 60(5300), 64 (5320), 100 (5500), 104(5520), 108(5540), 112(5560), 116(5580), 120(5600), 124(5620), 128 (5640), 132(5660), 136(5680), 140(5700), 149 (5745), 153(5765), 157(5785), 161 (5805), 165(5825)
			40	38(5190), 46(5230), 54(5270), 62(5310), 102

RF band	Peak antenna gain	Technology	Channel bandwidth	Channel number (Center frequency, MHz)
				(5510), 110(5550), 118(5590), 126(5630), 134(5670), 151(5755), 159(5795)
			80	42(5210), 58(5290), 106(5530), 122(5610), 155(5775)

FCC notices

IMPORTANT: The ConnectCore MP15 module has been certified by the FCC for use with other products without any further certification (as per FCC section 2.1091). Modifications not expressly approved by Digi could void the user's authority to operate the equipment.

IMPORTANT: OEMs must test final product to comply with unintentional radiators (FCC section 15.107 & 15.109) before declaring compliance of their final product to Part 15 of the FCC Rules.

IMPORTANT: The ConnectCore MP15 module has been certified for remote and base radio applications. If the module will be used for portable applications, the device must undergo SAR testing. This equipment has been tested and found to comply with the limits for a Class B digital device, pursuant to Part 15 of the FCC Rules. These limits are designed to provide reasonable protection against harmful interference in a residential installation. This equipment generates uses and can radiate radio frequency energy, and if not installed and used in accordance with the instructions, may cause harmful interference to radio communications. However, there is no guarantee that interference will not occur in a particular installation. If this equipment does cause harmful interference to radio or television reception, which can be determined by turning the equipment off and on, the user is encouraged to try to correct the interference by one or more of the following measures: Re-orient or relocate the receiving antenna, Increase the separation between the equipment and receiver, Connect equipment and receiver to outlets on different circuits, or Consult the dealer or an experienced radio/TV technician for help.

IMPORTANT: This module has been tested and found to comply with the following requirements for Modular Approval.

Part 15.247 - Operation within the bands 902-928 MHz, 2400-2483.5 MHz, and 5725-5850 MHz.

Part 15.407 – General technical requirements.

FCC-approved antennas

The ConnectCore MP15 module can be installed utilizing antennas and cables constructed with non-standard connectors (RPSMA, RPTNC, and so on).

The modules are FCC approved for fixed base station and mobile applications for the channels indicated in the tables below. If the antenna is mounted at least 20 cm (8 in) from nearby persons, the application is considered a mobile application. Antennas not listed in the table must be tested to comply with FCC Section 15.203 (Unique Antenna Connectors) and Section 15.247 (Emissions).

The following table shows the antenna that was used to certify the ConnectCore MP15 wireless module. This antenna can be replaced by others, however further certification testing is required. The number of tests to be carried out can be decreased by using an antenna of the same type, i.e. dualband omnidirectional dipole, showing lower peak gain. In such case, only a spot check may be required by the certification laboratories to keep current certifications valid according to FCC regulations. If replacing by an antenna with higher gain, complete radiated tests according to FCC regulations are required by the certification laboratories.

Antenna used to certify the ConnectCore MP15 wireless module

Antenna Type	Supplier	Antenna part no.	Freq. (MHz)	Peak antenna gain (dBi)	Directional gain (dBi)
Dipole	Linx Technologies Inc.	ANT-DB1-RAF-RPS	2402-2480	2.5	5.51
			5150-5250	4.6	7.61
			5250-5350	4.6	7.61
			5470-5725	4.6	7.61
			5725-5850	4.6	7.61
Dipole	KYOCERA	X9001091-W3DRMB	2402-2480	1.8	-
			5150-5250	4.0	-
			5250-5350	4.0	-
			5470-5725	4.0	-
			5725-5850	4.0	-
Dipole	TAOGLAS	GW.48.A151	2402-2480	3.42	6.43
			5150-5250	4.56	7.57
			5250-5350	4.56	7.57
			5470-5725	4.56	7.57
			5725-5850	4.56	7.57
PCB	ETHERTRONICS	1001932	2402-2480	2.5	5.51
			5150-5250	5	8.01

Antenna Type	Supplier	Antenna part no.	Freq. (MHz)	Peak antenna gain (dBi)	Directional gain (dBi)
			5250-5350	5	8.01
			5470-5725	5	8.01
			5725-5850	5	8.01
PCB	YAGEO	ANTX100P001B24553	2402-2480	4.6	7.61
			5150-5250	4.9	7.91
			5250-5350	3.9	6.91
			5470-5725	5.1	8.11
			5725-5850	5.1	8.11
PCB	KYOCERA	W3P35x8W04-U100D3B0A	2402-2480	2.3	-
			5150-5250	5	-
			5250-5350	5	-
			5470-5725	5	-
			5725-5850	5	-
PCB	TAOGLAS	FXP830.07.0100C *	2402-2480	3.32	6.33
			5150-5250	4.7	7.71
			5250-5350	4.7	7.71
			5470-5725	4.7	7.71
			5725-5850	4.7	7.71

Antenna Type	Supplier	Antenna part no.	Freq. (MHz)	Peak antenna gain (dBi)	Directional gain (dBi)
PCB	TAOGLAS	FXP831.07.0100C	2402-2480	3	6.01
			5150-5250	5.5	8.51
			5250-5350	5.5	8.51
			5470-5725	5.5	8.51
			5725-5850	5.5	8.51

***** Antenna gain in free space

Note If using the RF module in a portable application (for example - if the module is used in a hand-held device and the antenna is less than 20 cm (8 in) from the human body when the device is in operation): The integrator is responsible for passing additional SAR (Specific Absorption Rate) testing based on FCC rules 2.1091 and FCC Guidelines for Human Exposure to Radio Frequency Electromagnetic Fields, OET Bulletin and Supplement C. The testing results will be submitted to the FCC for approval prior to selling the integrated unit. The required SAR testing measures emissions from the module and how they affect the person.

RF exposure

CAUTION! To satisfy FCC RF exposure requirements for mobile transmitting devices, a separation distance of 20 cm (8 in) or more should be maintained between the antenna of this device and persons during device operation. To ensure compliance, operations at closer than this distance are not recommended. The antenna used for this transmitter must not be co-located in conjunction with any other antenna or transmitter. The preceding statement must be included as a CAUTION statement in OEM product manuals in order to alert users of FCC RF Exposure compliance.

Operating frequency

- 802.11 b/g/n: 2412-2462 MHz
- 802.11 a/n/ac : 5150-5250 MHz; 5250-5350 MHz; 5470-5725MHz; 5725-5850 MHz
- Bluetooth : 2402-2480 MHz

Europe and UK

- 2.412 to 2.472 GHz; 13 channels
- 5.180 to 5.320 GHz; 8 channels
- 5.500 to 5.700 GHz, 8 channels (excludes 5.600 to 5.640 GHz)

CE mark

The ConnectCore MP15 module is certified for use in several European countries. For information, visit www.digi.com/resources/certifications.

If the ConnectCore MP15 module is incorporated into a product, the manufacturer must ensure compliance of the final product with articles 3.1a and 3.1b of the RE Directive (Radio Equipment Directive). A Declaration of Conformity must be issued for each of these standards and kept on file as described in the RE Directive (Radio Equipment Directive).

Furthermore, the manufacturer must maintain a copy of the ConnectCore MP15 module user manual documentation and ensure the final product does not exceed the specified power ratings, antenna specifications, and/or installation requirements as specified in the user manual. If any of these specifications are exceeded in the final product, a submission must be made to a notified body for compliance testing to all required standards.

This equipment should be installed and operated with a minimum distance of 20 cm between the radiator and your body.

CE and UKCA OEM labeling requirements

The CE and UKCA markings must be clearly visible and legible when you affix it to the product. If this is not possible, you must attach these marks to the packaging (if any) or accompanying documents.

CE labeling requirements

The “CE” marking must be affixed to a visible location on the OEM product. The following figure shows CE labeling requirements.

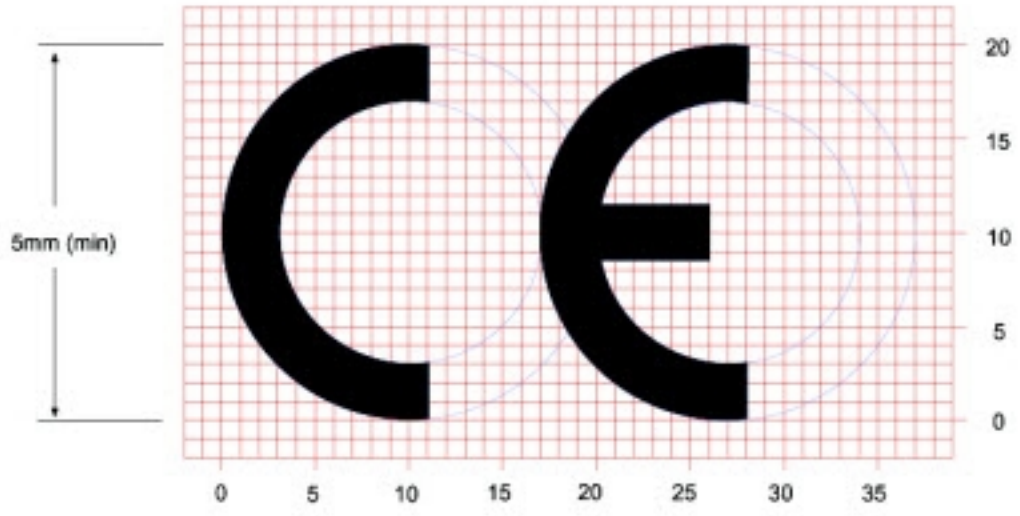

The CE mark shall consist of the initials “CE” taking the following form:

- If the CE marking is reduced or enlarged, the proportions given in the above graduated drawing must be respected.
- The CE marking must have a height of at least 5 mm except where this is not possible on account of the nature of the apparatus.
- The CE marking must be affixed visibly, legibly, and indelibly.

UK Conformity Assessed (UKCA) labeling requirements

See https://www.gov.uk/guidance/using-the-ukca-marking for further details.

You must make sure that:

- if you reduce or enlarge the size of your marking, the letters forming the UKCA marking must be in proportion to the version set out below
- the UKCA marking is at least 5 mm in height – unless a different minimum dimension is specified in the relevant legislation
- the UKCA marking is easily visible, legible (from 1 January 2023 it must be permanently attached)
- the UKCA marking can take different forms (for example, the colour does not have to be solid), as long as it remains visible, legible and maintains the required proportions.

Important note

Digi customers assume full responsibility for learning and meeting the required guidelines for each country in their distribution market. Refer to the radio regulatory agency in the desired countries of operation for more information.

Declarations of Conformity

Digi has issued Declarations of Conformity for the ConnectCore MP15 module concerning emissions, EMC, and safety. For more information, see http://www.digi.com/resources/certifications.

Important note

Digi customers assume full responsibility for learning and meeting the required guidelines for each country in their distribution market. Refer to the radio regulatory agency in the desired countries of operation for more information.

Approved antennas

The same antennas have been approved for Europe as stated in the FCC table for use with the ConnectCore MP15 module.

Country list

AT	BE	BG	CZ	DK
EE	FR	DE	IS	IE
IT	EL	ES	CY	LV
LI	LT	LU	HU	MT
NL	NO	PL	PT	RO
SI	SK	TR	FI	SE
CH	UK	HR		

Note This device is restricted to indoor use only when operating in the 5150-5350MHz frequency range within all member states.

Radio Type / Description		Transmitter Frequency (MHz)	Maximum Output Power
Bluetooth	BR+EDR	2402 ~ 2480	15.86 dBm
	Low Energy	2402 ~ 2480	6.88 dBm
WLAN 2.4G	802.11b	2412 ~ 2472	19.24 dBm
	802.11g	2412 ~ 2472	19.31 dBm
	802.11n 20	2412 ~ 2472	19.54 dBm
	802.11n 40	2422 ~ 2462	19.45 dBm
WLAN 5G	802.11a	5150 ~ 5350	22.16 dBm
		5470 ~ 5725	21.99 dBm
		5725 ~ 5850	13.17 dBm
	802.11n_20M 802.11ac_20M	5150 ~ 5350	22.22 dBm
		5470 ~ 5725	22.00 dBm
		5725 ~ 5850	13.16 dBm
	802.11n_40M 802.11ac_40M	5150 ~ 5350	22.55 dBm
		5470 ~ 5725	21.82 dBm
		5725 ~ 5850	13.28 dBm
	80211ac_80M	5150 ~ 5350	21.52 dBm
		5470 ~ 5725	20.90 dBm
		5725 ~ 5850	13.15 dBm

Canada (IC)

IC: 1846A-CCMP1

PMN: ConnectCore MP15

HVIN: 55002119-XX

Canadian Notice

This device contains licence-exempt transmitter(s)/receiver(s) that comply with Innovation, Science and Economic Development Canada's licence-exempt RSS(s). Operation is subject to the following two conditions:

1. This device may not cause interference.
2. This device must accept any interference, including interference that may cause undesired operation of the device.

Avis Canadien

L'émetteur/récepteur exempt de licence contenu dans le présent appareil est conforme aux CNR d'Innovation, Sciences et Développement économique Canada applicables aux appareils radio exempts de licence. L'exploitation est autorisée aux deux conditions suivantes :

1. L'appareil ne doit pas produire de brouillage;
2. L'appareil doit accepter tout brouillage radioélectrique subi, même si le brouillage est susceptible d'en compromettre le fonctionnement.

Labeling requirements

Labeling requirements for Industry Canada are similar to those of the FCC.

Required End Product Labeling

Any device incorporating this module must include an external, visible, permanent marking or label which states:

"Contains IC : 1846A-CCMP1"

Obligation d'étiquetage du produit final:

Tout dispositif intégrant ce module doit comporter un externe, visible, marquage permanent ou une étiquette qui dit:

"Contient IC : 1846A-CCMP1"

Transmitters with detachable antennas

This radio transmitter (IC: 1846A-CCMP1) has been approved by Industry Canada to operate with the antenna types listed in the table above with the maximum permissible gain and required antenna impedance for each antenna type indicated. Antenna types not included in this list, having a gain greater than the maximum gain indicated for that type, are strictly prohibited for use with this device.

Le présent émetteur radio (IC: 1846A-CCMP1) a été approuvé par Industrie Canada pour fonctionner avec les types d'antenne énumérés ci-dessous et ayant un gain admissible maximal et l'impédance requise pour chaque type d'antenne. Les types

d'antenne non inclus dans cette liste, ou dont le gain est supérieur au gain maximal indiqué, sont strictement interdits pour l'exploitation de l'émetteur.

Under Industry Canada regulations, this radio transmitter may only operate using an antenna of a type and maximum (or lesser) gain approved for the transmitter by Industry Canada. To reduce potential radio interference to other users, the antenna type and its gain should be so chosen that the equivalent isotropically radiated power (e.i.r.p.) is not more than that necessary for successful communication.

Conformément à la réglementation d'Industrie Canada, le présent émetteur radio peut fonctionner avec une antenne d'un type et d'un gain maximal (ou inférieur) approuvé pour l'émetteur par Industrie Canada. Dans le but de réduire les risques de brouillage radioélectrique à l'intention des autres utilisateurs, il faut choisir le type d'antenne et son gain de sorte que la puissance isotrope rayonnée équivalente (p.i.r.e.) ne dépasse pas l'intensité nécessaire à l'établissement d'une communication satisfaisante.

The ConnectCore MP15 module is for professional (OEM) installation only.

Le module ConnectCore MP15 doit impérativement être installé par un professionnel (OEM).

RF exposure

To satisfy Industry Canada RF exposure requirements, a separation distance of 20 cm or more should be maintained between the antenna of this device and persons during device operation.

Pour satisfaire aux exigences d'Industrie Canada concernant l'exposition RF, une distance égale ou supérieure à 20cm doit être respectée entre les antennes de ce produit et les personnes se trouvant à proximité.

The preceding statement must be included as a CAUTION statement in OEM product manuals in order to alert users of Industry Canada RF Exposure compliance.

Cette information doit être incluse dans le manuel du produit OEM afin d'alerter les utilisateurs sur la nécessité de respecter l'exposition RF d'Industrie Canada.

Approved antennas

The same antennas have been approved for Canada as stated in the FCC table for use with the ConnectCore MP15 module.

Japan

電波法により5GHz帯は屋内使用に限ります。

This device has been granted a designation number by Ministry of Internal Affairs and Communications according to:

Ordinance concerning Technical Regulations Conformity Certification etc. of Specified Radio Equipment (特定無線設備の技術基準適合証明等に関する規則).

- Article 2, Paragraph 1, Item 19, 19-3, 19-3-2 Category: WW, XW, YW
- Model/Name of equipment: ConnectCore MP15
- Radio label marking:
  - R: 210-207701

This device should not be modified (otherwise the granted designation number will be invalid).

- 2.412 to 2.472 GHz; 13 channels
- 5.180 to 5.320 GHz; 8 channels
- 5.500 to 5.700 GHz; 11 channels

Approval Label (MIC Marking)

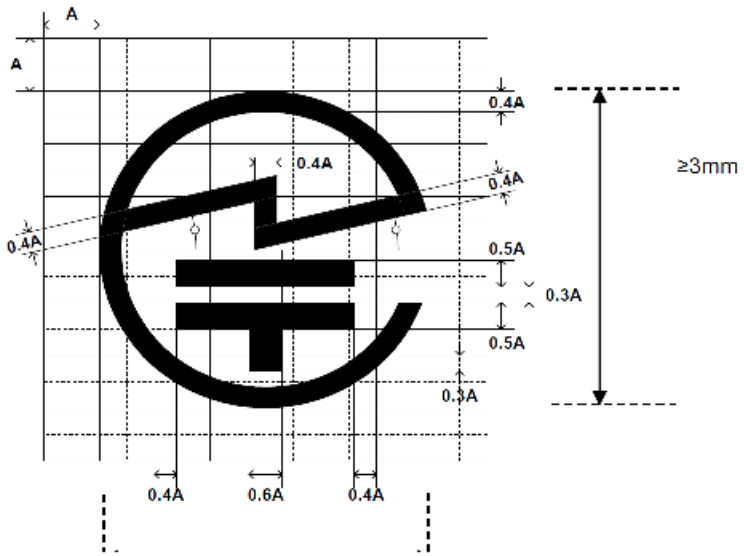

Label text

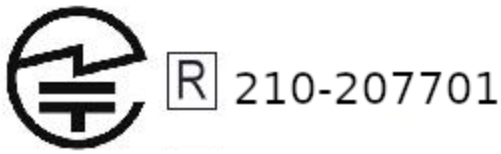

Note Due to space constraints, the ConnectCore MP15 module label doesn't support radio marking for Japan. If space allows, end product label should support radio marking for Japan. If not, radio marking shall be documented in the user manual.

Note The warning "Indoor only(5GHz)" must go on the end product - or E Label (Display).

Master station: Indoor only

親局: 当該無線設備の送信は、屋内のみにおいて使用可能である旨

Slave station: The transmission of radio equipment is indoors use only (Except when communicating with 5.2GHz high power base stations or relay stations)

子局:当該無線設備の送信は、5.2GHz帯高出力データ通信システムの基地局または陸上移動中継局と通信する場合を除き、屋内においてのみ可能である旨。

If the device is too small it can be displayed on the user manual and on the packaging or container.